<1> SAFETY CHARACTERISTICS	0
<2> SIGNIFICANT CHARACTERISTICS	0

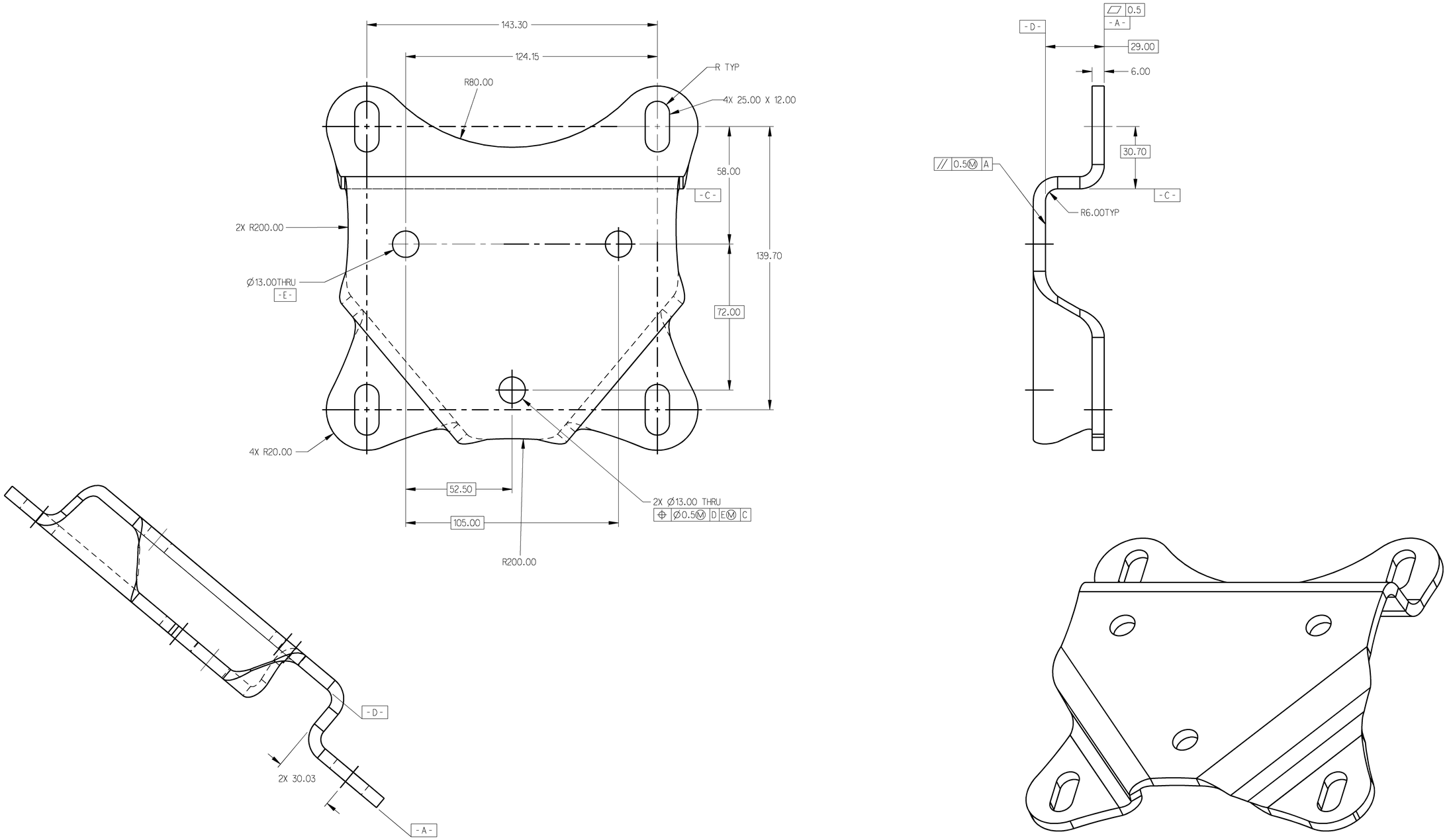

NOTES:

ALL TRIM TOLLERANCE TO BE ±1.0
ALL DIMENSIONS TO BE ±0.5
ALL ANGLES TO BE ±2.0°
UNLESS OTHERWISE SPECIFIED

THIRD ANGLE PROJECTION

General Specification JED-334-0 , Size ISO 14405 E , JED-762		Rough Part No.
-		-
Treatment	Surface Protection	Material
-	A.O. SPEC P25	B100-7

Copyright WABCO®		WABCO©
Date	Signature	BRACKET, FINISHED
Drawn		
2019-07-16	Srinivasaperumal	
Checked		
2019-07-16	Hilla	
Expert		
-		

Mass	Scale	Material No.			Date of first issue: 2009-06-12
- KG	1:1	100 001 025 0			Doc.Code 005 / Language EN / Sheet 1/1
Size	CAD System				
A 1	CREO	ECN-No. 501845	Revision 1x C	Techn. Resp. 6260_MW	Replacement for -

100mm

Non è permesso consegnare a terzi o riprodurre questo documento, né utilizzarne il contenuto o renderlo comunque noto a terzi senza autorizzazione esplicita. Ogni infrazione costituisce un evidente abuso e comporterà il risarcimento dei danni subiti. E' fatta riserva di tutti i diritti derivanti da brevetti o modelli.

Copying of this document and giving it to others and the use or communication of the contents thereof, are forbidden without express authority. Contraventions of this restriction will constitute an evident abuse and result in a liability to the payment of damages. All rights are reserved in the event of the grant of patent or registration of a utility model or design. This document is the subject of copyright.

Toute Communication ou reproduction de ce document, toute exploitation ou communication de son contenu sont interdites, sauf autorisation expresse. Tout manquement à cette règle constitue un abus évident et expose son auteur au versement de dommages et intérêts. Tous droits de propriété industrielle réservés, notamment en matière de brevets et de modèles.

Weitergabe sowie Vervielfältigung dieser Unterlage, Verwertung und Mitteilung ihres Inhalts nicht gestattet, soweit nicht ausdrücklich zugestanden. Zuwiderhandlungen sind zu Schadenersatz. Alle Rechte für den Fall der Patenterteilung oder Gebrauchsmustereintragung vorbehalten.