BORE DIAMETER	66.7 mm
STROKE	46 mm
DISPLACEMENT	160cm^3
MAXIMUM SPEED	3000 rpm
AXIAL PLAY	0.25±0.2mm
PAINT COLOR	BLACK

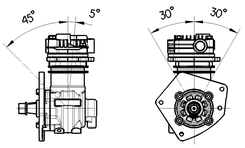

COMPRESSOR ORIENTATION

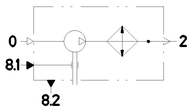

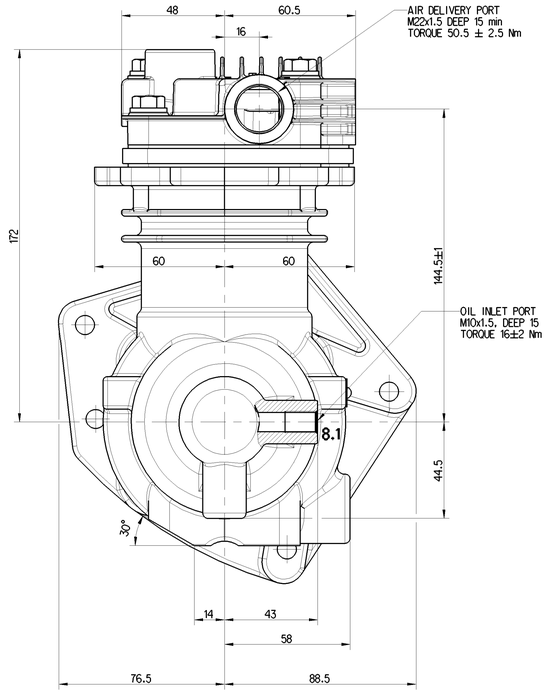

H-H

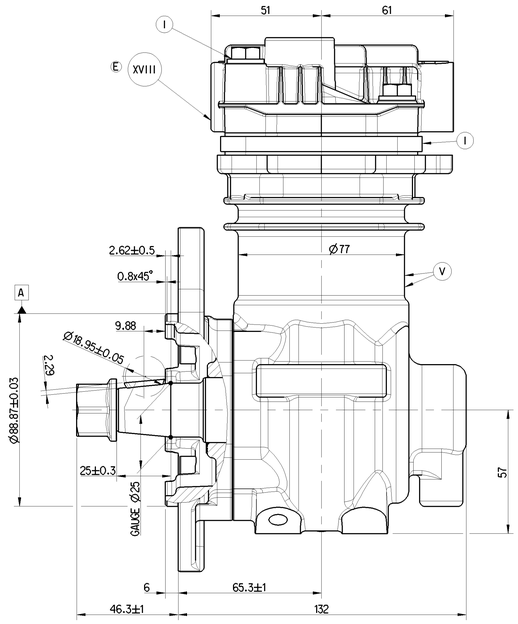

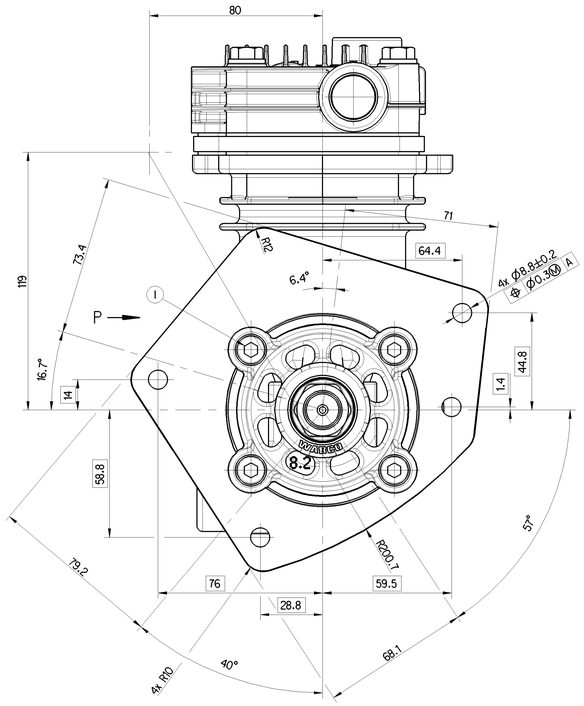

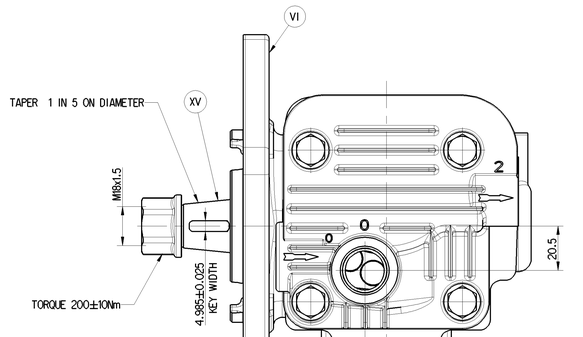

ASSY No, SL No. AND MONTH/YEAR
OF MANUFACTURING ARE SHOWN HERE

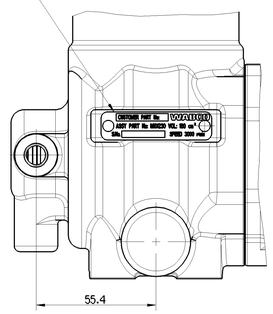

VIEW P

XVIII	ALUMINIUM ALLOY	NO TREATMENT	E
XVII	STEEL	NO TREATMENT	
XVI	CAST IRON	PLATED	
XV	STEEL	ZINC IRON PLATED	
XIV	CAST IRON	NO TREATMENT	
XIII	ZINC ALLOY	ANODISED	
XII	PLASTIC	NO TREATMENT	
XI	RUBBER	NO TREATMENT	
X	STAINLESS STEEL	NO TREATMENT	
IX	BRASS	NO TREATMENT	
VIII	ZINC ALLOY	CHROMATED	
VII	ALUMINIUM ALLOY	ANODISED	
VI	ALUMINIUM ALLOY	CHROMATED	
V	CAST IRON	PAINTED	
IV	STEEL	POWDER COATED	
III	STEEL	PAINTED	
II	STEEL	PHOSPHATED	
I	STEEL	ZINC PLATED	
PART CODE	MATERIAL	SURFACE PROTECTION	

OPEN PORTS ARE FITTED WITH CLOSURE PLUGS FOR STORAGE AND TRANSIT PURPOSES

EXPOSED MACHINED CAST IRON /STEEL SURFACES ARE PROTECTED WITH RUST PREVENTION OIL

0 = AIR INLET PORT
2 =AIR DELIVERY PORT
8.1 = OIL INLET
8.2 = OIL DRAIN

Toda Operação ou reprodução, no todo ou parcial, bem como a comercialização de qualquer outro meio, por qualquer processo, sem autorização prévia, por escrito, da WABCO, constitui ofensa à propriedade intelectual e está proibida nos termos da lei. Todos os direitos reservados. Nenhuma parte deste documento pode ser copiada ou reproduzida sem autorização prévia da WABCO. Qualquer violação será perseguida judicialmente.
Copyright WABCO
Any reproduction or distribution of this document or any part thereof without prior written consent of WABCO is prohibited. Violation of this copyright will be prosecuted by law. All rights reserved.
Ce document ne peut être reproduit ni transmis à des tiers dans quelque forme que ce soit sans l'accord préalable et écrit de la société WABCO. Toute infraction à ces droits sera poursuivie.
Questo documento non può essere riprodotto o trasmesso a terzi in qualsiasi forma senza il consenso scritto della WABCO. Ogni violazione sarà perseguita.
Esta información no puede ser copiada ni distribuida a terceros sin autorización previa y por escrito de WABCO. Toda violación será perseguida judicialmente.
Não é permitida a reprodução, no todo ou parte, sem autorização prévia, por escrito, da WABCO. Qualquer violação será perseguida judicialmente.
Kopiowanie lub udostępnianie osobom trzecim w jakiejkolwiek formie bez uzyskania zgody WABCO jest zabronione. Naruszenie powyższego zakazu będzie ścigane na podstawie prawa.
Kopiowanie lub udostępnianie osobom trzecim w jakiejkolwiek formie bez uzyskania zgody WABCO jest zabronione. Naruszenie powyższego zakazu będzie ścigane na podstawie prawa.
Copying or disclosure to others in any form without the prior written consent of WABCO is prohibited. Violation of this copyright will be prosecuted by law.
Kopiowanie lub udostępnianie osobom trzecim w jakiejkolwiek formie bez uzyskania zgody WABCO jest zabronione. Naruszenie powyższego zakazu będzie ścigane na podstawie prawa