ASSEMBLY PROCEDURE

(a)

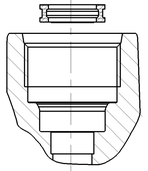

THE SPRING ELEMENT IS INSERTED INTO THE CHAMBER UNDER THE THREAD ROOT OF THE CONNECTION BORE (a) AND (b).

(b)

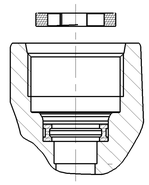

THE RETAINING CLIP IS INTRODUCED SO THAT IT RESTS FLAT ON THE THREAD ROOT (b) AND (c).

THE SPRING ELEMENT AND RETAINING CLIP ARE SYMMETRICAL.

(c)

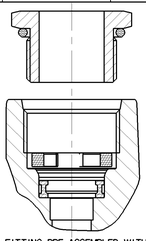

THE MALE FITTING PRE-ASSEMBLED WITH THE PRE-GREASED O-RING TO SEAL THE THREAD IS SCREWED BY HAND INTO THE TAPPED BORE (c) AND TIGHTENED.

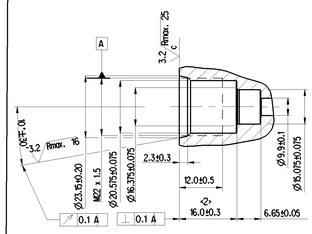

DETAILS OF PORT MACHINING FOR M22x1.5

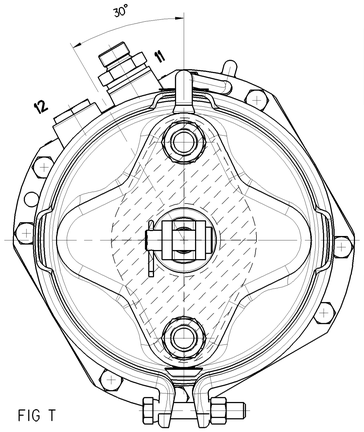

FIG T

ASSY. No.	FIG	MNAL PART No	REMARKS
M252890	BASIC DRAWING	7708AAP00291N	LH
M252900	FIG T	7708AAP00301N	RH

ASSY PART No. AND DATE OF MANUFACTURE ARE SHOWN HERE

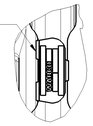

VIEW S

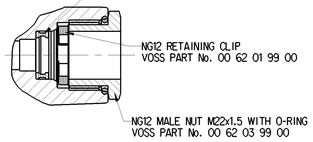

REPAIR KIT MSP 25/33 CONSISTS OF ITEMS MARKED

	Sl.No	MNAL PART No.	WIN PART No.	DESCRIPTION	QTY
	1		M270130	BEARING	1
	2		M843331	DIAPHRAGM	1
	3		M273660	ELBOW	2
	4		M276390	TUBE	1
	5		M275040	GAITER	1
D	6		8105110274	SPLIT PIN	1
	7		M275530	CHECK VALVE	1
D	8		8979802754	SEALING RING	1
D	9		8979801424	SEALING RING	1
D	10		8979802384	SEALING RING	1
	11		M275020	SEAL	1
	12		M275010	BEARING	1
D	13		8920100094	KNURL PIN	1
D	14		8952266974	RETAINING CLIP NG-12	1
D	15		8953700044	SPRING ELEMENT NG-12	1
D	16		8932204272	SEALING RING NG-12	1
	17		M275030	DUST SEAL	1
D	18		8971100014	WASHER	1
D	19		8979801464	SEALING RING NG-12	1
D	20		8979801534	SEALING RING NG-12	1
	21		M919910	GREASE SACHET	4
D	22		8951800024	SPECIAL WASHER	1
	23		8979802304	SEALING RING	1

PART No. M925940 AND M912620 PROVIDED IN THE KIT TO STANDARDISE THE REPAIR KIT FOR SPRING BRAKE ACTUATOR VARIANTS.

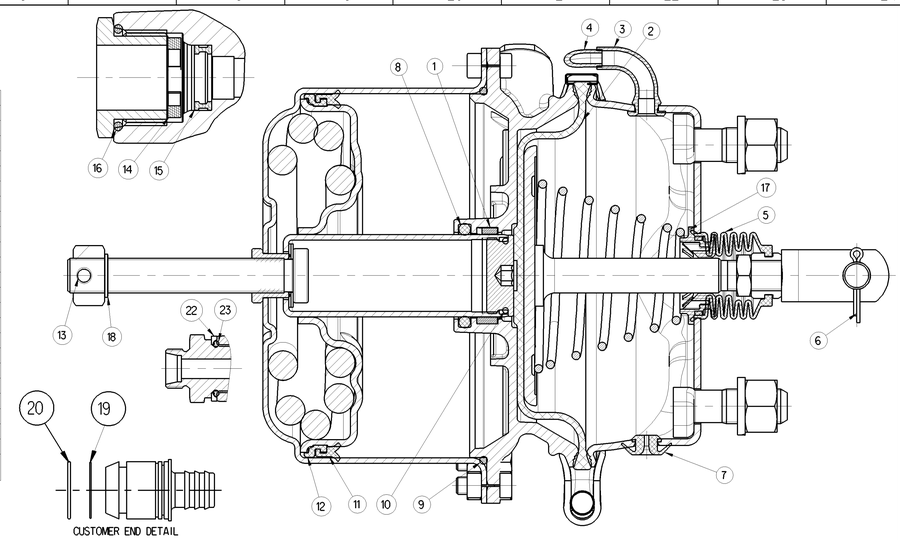

◇1 SAFETY CHARACTERISTICS	0
◇2 SIGNIFICANT CHARACTERISTICS	2

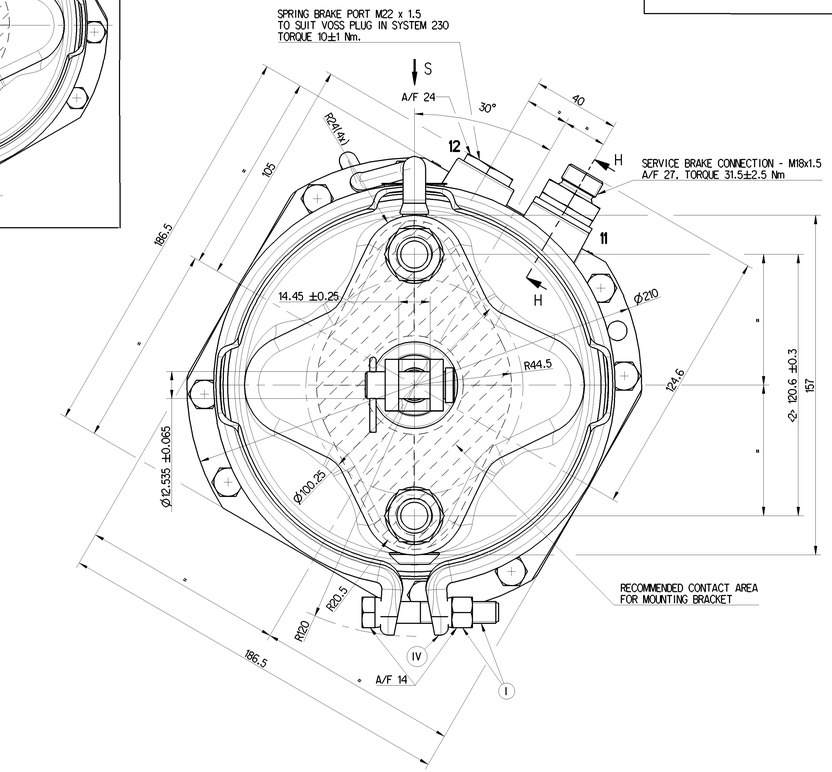

RECOMMENDED CONTACT AREA FOR MOUNTING BRACKET

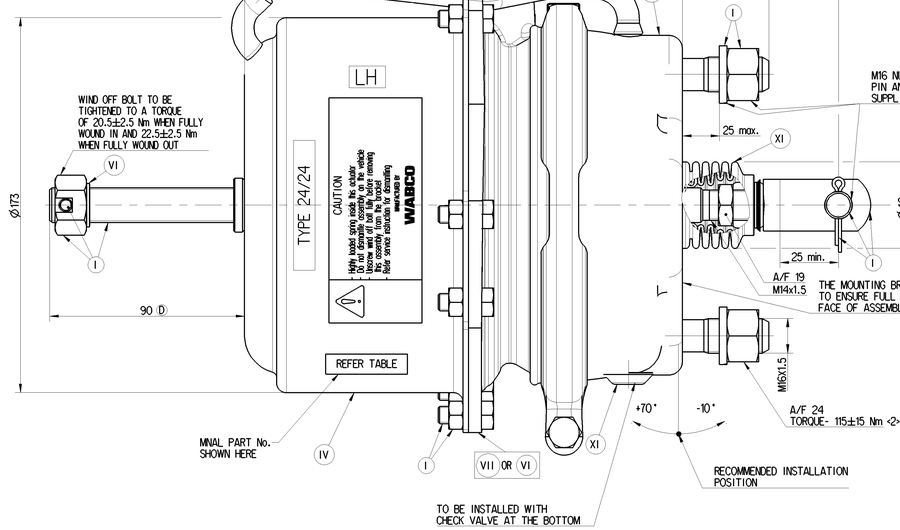

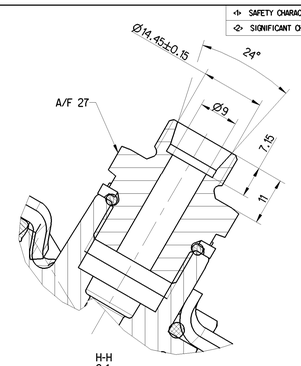

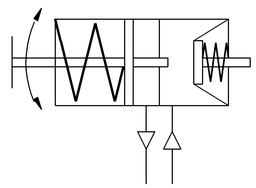

CIRCUIT DIAGRAM

PRODUCT SPECIFICATION No. ISSUE No. 1, DATED 26.03.09	PSSC 264C
UNIT DRAWN WITH PRESSURE APPLIED AT PORT 12	
MEDIUM	AIR
WORKING PRESSURE	10 bar
MAXIMUM WORKING PRESSURE	13 bar
SERVICE BRAKE STROKE	57 mm min.
INNER DIAMETER OF SERVICE CHAMBER	155.85
SPRING BRAKE STROKE	57 mm min.
INNER DIAMETER OF SPRING CHAMBER	168.15
HOLD OFF PRESSURE	4.3 ± 0.4 bar
RELEASE PRESSURE	4.7 ± 0.4 bar
THERMAL RANGE OF APPLICATION	-40°C TO +80°C
CORROSION RESISTANCE	240 HOURS OF NSS
PRESSURE AT WHICH PUSH ROD STARTS MOVING	< 0.3 bar (LIFT-OFF PRESSURE AT 0 mm STROKE)
PRESSURE AT WHICH PUSH ROD IS FULLY OUT	< 0.5 bar (LIFT-OFF PRESSURE AT 57 mm STROKE)
OPEN PORTS ARE FITTED WITH CLOSURE PLUG AND CLOSURE SLEEVE FOR STORAGE AND TRANSIT PURPOSES	
QUALITY COMPLIANCE PLAN TESTS ARE CONDUCTED REGULARLY AS PER CLAUSE NO.15 OF PSSC 264C	
ASSEMBLY WILL BE SUPPLIED WITH SPRING SIDE IN FULLY WOUND OUT CONDITION SPRING SIDE TO BE WOUND IN AFTER INSTALLATION.	
▲ SERVICE LIFE TO FIRST OVERHAUL - 3 YEARS / 3,00,000 KM WHICHEVER IS EARLIER IF FITTED AS PER RECOMMENDED LAYOUT	

PERFORMANCE CHARACTERISTICS- SPRING SIDE

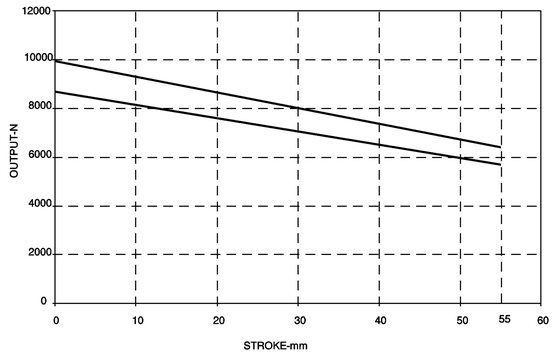

PERFORMANCE CHARACTERISTICS - SERVICE SIDE

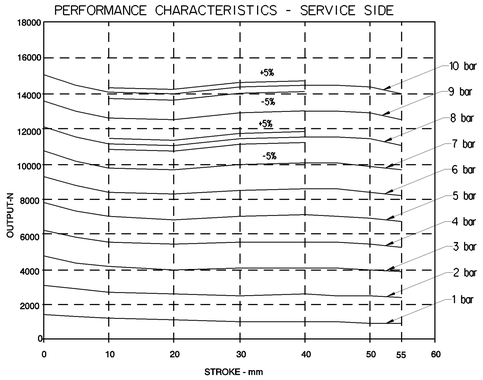

TOLERANCE BAND - ±5% FOR STROKE - 10 mm TO 40 mm

RETURN SPRING CHARACTERISTICS

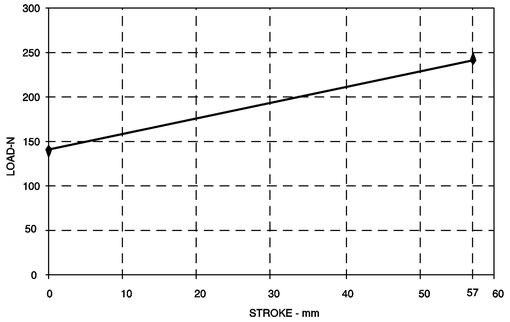

▲ KEY INSTRUCTION

PART CODE	MATERIAL	SURFACE PROTECTION
XVII	STEEL	NO TREATMENT
XVI	CAST IRON	PLATED
XV	STEEL	ZINC IRON PLATED
XIV	CAST IRON	NO TREATMENT
XIII	ZINC ALLOY	ANODISED
XII	PLASTIC	NO TREATMENT
XI	RUBBER	NO TREATMENT
X	STAINLESS STEEL	NO TREATMENT
IX	BRASS	NO TREATMENT
VIII	ZINC ALLOY	CHROMATED
VII	ALUMINIUM ALLOY	ANODISED
VI	ALUMINIUM ALLOY	CHROMATED
V	CAST IRON	PAINTED
IV	STEEL	POWDER COATED
III	STEEL	PAINTED
II	STEEL	PHOSPHATED
I	STEEL	ZINC PLATED

Trade Commercial is reproducible or to disclosed, tests modifiable or transmissible to any notes and liability, not permitted without written consent. Our independent duties apply construction also expert or models as related or warranted to damages of the Industrial Property Rights Act. Copyright Protection Act. Copyright Protection Act. Copyright Protection