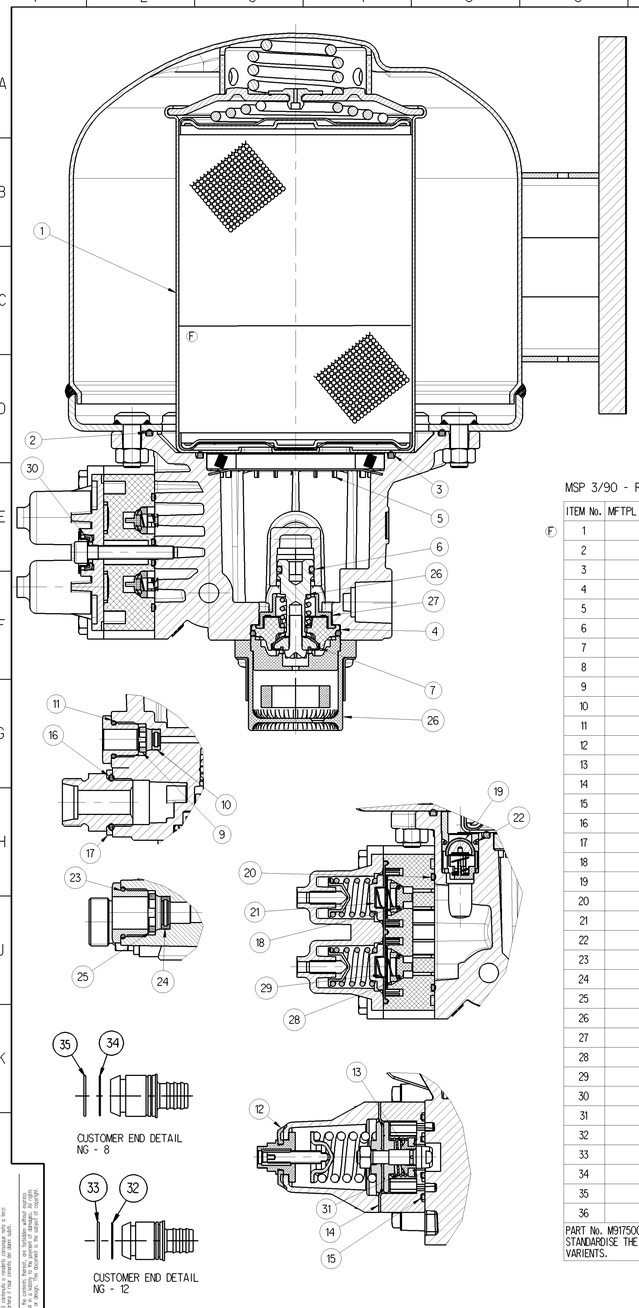


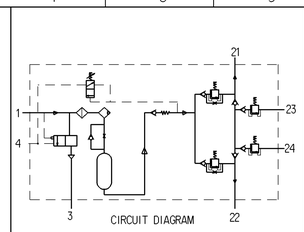


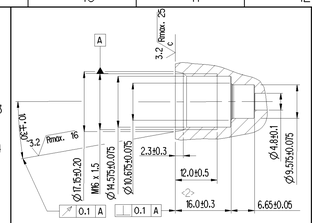


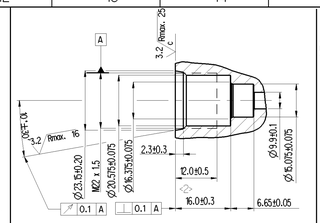


ASSEMBLY PROCEDURE:

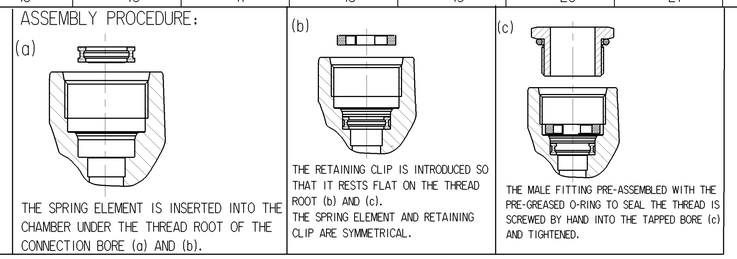


MSP 3/90 - REPAIR KIT CONSIST OF ITEMS SHOWN

| ITEM No. | MFTPL PART No. | WABCO PART No. | DESCRIPTION. | QTY. |
|---|---|---|---|---|
| 1 | | 432 470 002 2 | DESICCANT CARTRIDGE | 1 |
| 2 | | M932980 | SEALING RING | 1 |
| 3 | | M932990 | SEALING RING | 1 |
| 4 | | M924970 | SEALING RING | 1 |
| 5 | | M341260 | FILTER RETAINER | 1 |
| 6 | | M630720 | SEALING RING | 1 |
| 7 | | M311980 | VALVE | 1 |
| 8 | | M312100 | SILENCER ASSEMBLY | 1 |
| 9 | | M932770 | RETAINING CLIP NG-8 | 1 |
| 10 | | M932780 | SPRING ELEMENT NG-8 | 1 |
| 11 | | M932760 | SEALING RING NG-8 | 1 |
| 12 | | M342490 | EXHAUST FLAP | 1 |
| 13 | | M310880 | VALVE | 1 |
| 14 | | M334870 | DIAPHRAGM | 1 |
| 15 | | M341200 | GASKET | 1 |
| 16 | | M912620 | SEALING RING | 1 |
| 17 | | M925940 | SPECIAL WASHER | 1 |
| 18 | | M912400 | SEALING RING | 6 |
| 19 | | M312050 | VALVE | 1 |
| 20 | | M341210 | GASKET | 1 |
| 21 | | M311600 | DIAPHRAGM | 1 |
| 22 | | M912090 | SEALING RING | 1 |
| 23 | | M932700 | SEALING RING NG-12 | 4 |
| 24 | | M932720 | SPRING ELEMENT | 4 |
| 25 | | M932730 | RETAINING CLIP | 4 |
| 26 | | M335010 | COMPRESSION SPRING | 1 |
| 27 | | M341170 | VALVE SEAT | 1 |
| 28 | | M339490 | VALVE | 6 |
| 29 | | M336900 | COMPRESSION SPRING | 7 |
| 30 | | M312040 | LIP SEAL | 1 |
| 31 | | M833010 | INLET VALVE SPRING | 1 |
| 32 | | M935980 | SEALING RING NG-12 | 4 |
| 33 | | M935990 | SEALING RING NG-12 | 4 |
| 34 | | M936000 | SEALING RING NG-8 | 1 |
| 35 | | M936010 | SEALING RING NG-8 | 1 |
| 36 | | M929560 | GREASE SACHET | 2 |

PART No. M917500, M910680 AND M331600 PROVIDED IN THE KIT TO STANDARDISE THE REPAIR KIT FOR DRYING AND DISTRIBUTION UNIT VARIENTS.

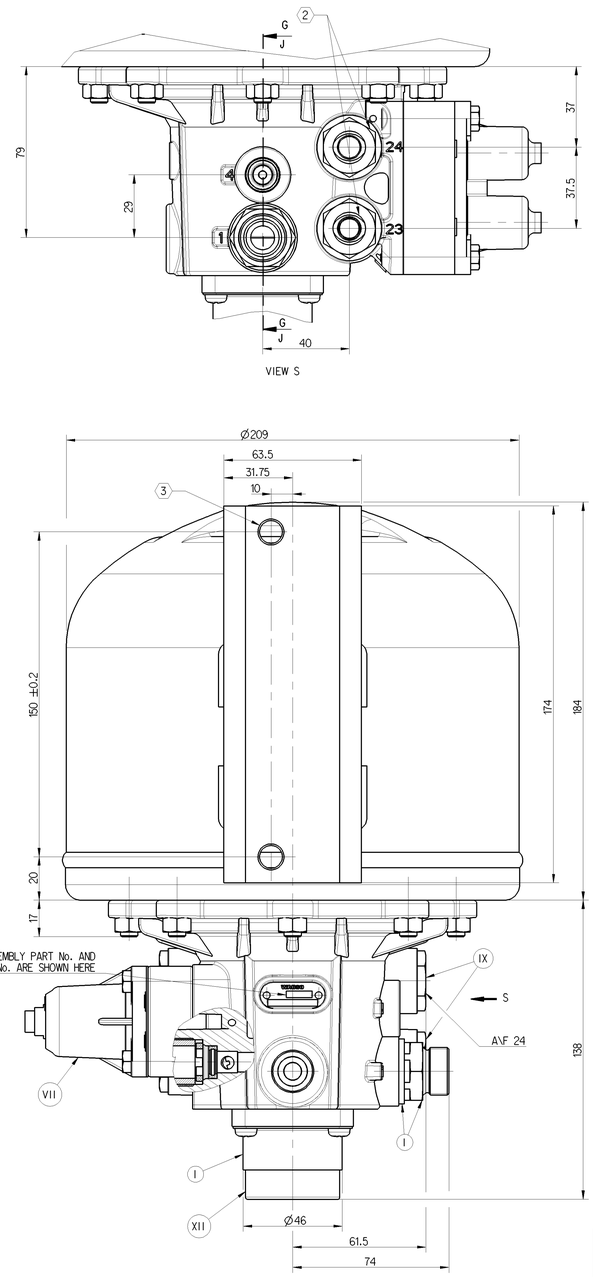


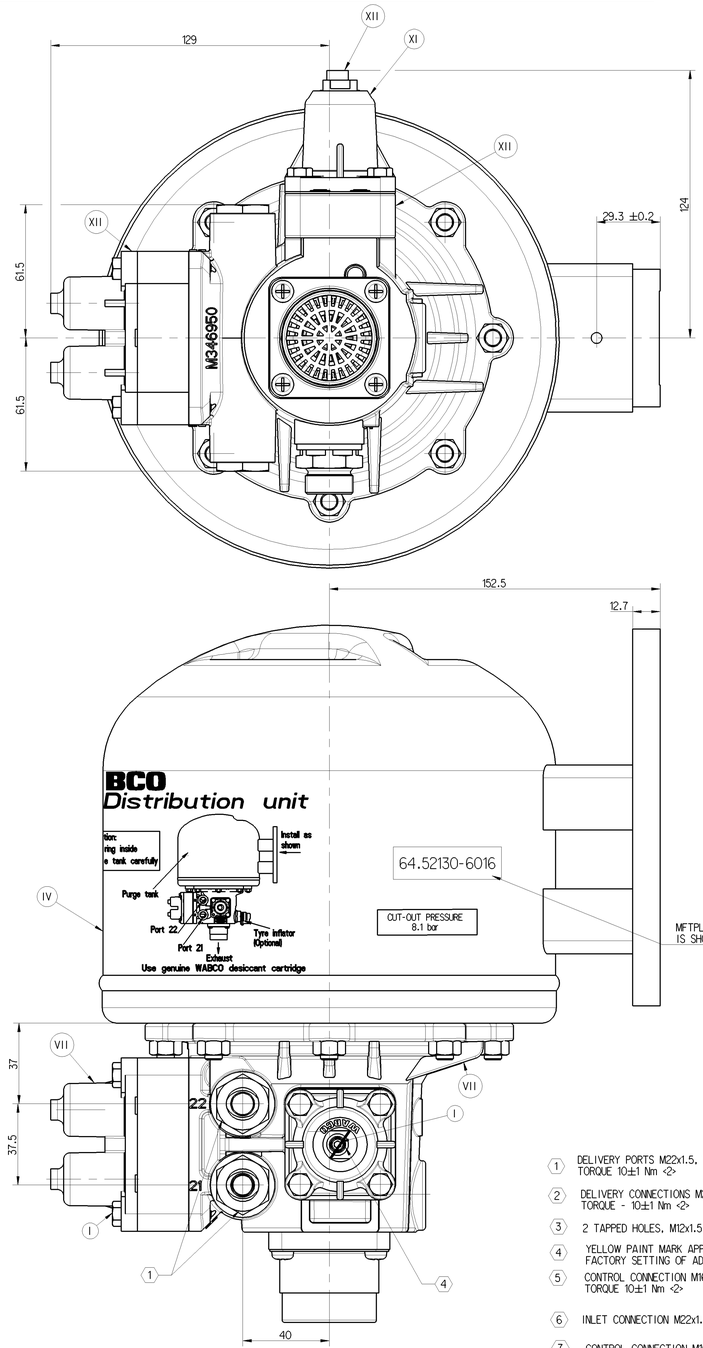


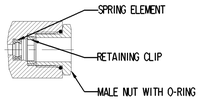


| DESCRIPTION | M22x1.5 VOSS PART No. | M16x1.5 VOSS PART No. |
|---|---|---|
| MALE NUT WITH O-RING | 00 62 03 99 00 | 00 62 02 99 00 |
| RETAINER CLIP | 00 62 01 90 00 | 00 62 00 90 00 |
| SPRING ELEMENT | 00 62 05 99 00 | 00 62 04 99 00 |

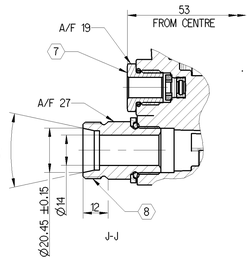


| CUT OUT PRESSURE ±0.2 (bar) | CUT IN PRESSURE min. (bar) | DYNAMIC OPENING PRESSURE (bar) + 0.3 - 0.0 ELEMENT No (PORT No.) | | | | RETAINING PRESSURE (bar) MINIMUM ELEMENT No (PORT No.) | | | |
|---|---|---|---|---|---|---|---|---|---|
| | | 1 (21) | 2 (22) | 3 (23) | 4 (24) | 1 (21) | 2 (22) | 3 (23) | 4 (24) |
| 8.1 | 6.9 | 7.2 | 7.2 | 6.9 | 6.9 | 0 | 6.8 | 6.6 | 6.6 |
| | | | | | | 6.8 | 0 | 6.6 | 6.6 |
| | | | | | | 4.7 | 4.7 | 0 | 6.6 |
| | | | | | | 4.7 | 4.7 | 6.6 | 0 |

| SL.No. | NOTES | |
|---|---|---|
| 1 | PRODUCT FUNCTION AND RELIABILITY | |
| 1.1 | BLOW OFF PRESSURE | 12.25 ±2.25 bar |
| 1.2 | EQUIVALENT FLOW DIAMETER | 7mm |
| 1.3 | NOISE LEVEL WHEN TESTED AS PER PSSC 162C | ∠72dBA |
| 1.4 | THERMAL RANGE OF APPLICATION | - 40°C TO +80°C |
| 2 | QUALITY COMPLIANCE TESTS WILL BE CARRIED OUT REGULARLY AS PER CLAUSE No. 18 OF PSSC 162C | |
| 3 | SERVICE LIFE TO FIRST OVERHAUL - 3 YEARS/ 300000 KM WHICHEVER IS EARLIER IF FITTED AS PER RECOMMENDED LAYOUT. | |
| 4 | OPEN PORTS/MALE THREADS ARE FITTED WITH CLOSURE PLUGS/ CLOSURE SLEEVE FOR STORAGE AND TRANSIT PURPOSES | |

<2> SIGNIFICANT CHARACTERISTICS (⊢▶6x)

1. DELIVERY PORTS M22x1.5, TO SUIT VOSS PLUG IN SYSTEMS 230 TORQUE 10±1 Nm <2>
2. DELIVERY CONNECTIONS M22x1.5, TO SUIT VOSS PLUG IN SYSTEMS 230 TORQUE - 10±1 Nm <2>
3. 2 TAPPED HOLES, M12x1.5, TORQUE 82.5±4.5 Nm
4. YELLOW PAINT MARK APPLIED TO INDICATE FACTORY SETTING OF ADJUSTMENT SCREW.
5. CONTROL CONNECTION M16x1.5 TO SUIT VOSS PLUG IN SYSTEMS 230 TORQUE 10±1 Nm <2>
6. INLET CONNECTION M22x1.5 TORQUE 50.5±2.5 Nm
7. CONTROL CONNECTION M16x1.5 TO SUIT VOSS PLUG IN SYSTEMS 230 TORQUE 10±1 Nm <2>
8. INLET CONNECTION M26x1.5 TORQUE 50.5±2.5 Nm

| PART CODE | MATERIAL | SURFACE PROTECTION |
|---|---|---|
| XVII | STEEL | NO TREATMENT |
| XVI | CAST IRON | PLATED |
| XV | STEEL | ZINC IRON PLATED |
| XIV | CAST IRON | NO TREATMENT |
| XIII | ZINC ALLOY | ANODISED |
| XII | PLASTIC | NO TREATMENT |
| XI | RUBBER | NO TREATMENT |
| X | STAINLESS STEEL | NO TREATMENT |
| IX | BRASS | NO TREATMENT |
| VIII | ZINC ALLOY | CHROMATED |
| VII | ALUMINIUM ALLOY | ANODISED |
| VI | ALUMINIUM ALLOY | CHROMATED |
| V | CAST IRON | PAINTED |
| IV | STEEL | POWDER COATED |
| III | STEEL | PAINTED |
| II | STEEL | PHOSPHATED |
| I | STEEL | ZINC PLATED |

Toda comunicação ou reprodução de este documento, bem como a utilização e comunicação do seu conteúdo não autorizadas, são proibidas. Todos os direitos de propriedade industrial, incluindo os direitos de patente e de registo de desenho ou modelo, ficam reservados à WABCO. Nos casos de registos de desenho ou modelo, ficam também reservados os direitos de alterar o conteúdo do ponto anterior e o direito de exigir a devolução do documento, sem qualquer direito para o detentor do mesmo.

Reproduction and transmission, even in part, of this document, its contents and accompanying data, are prohibited. All rights, including those arising from patents and registered designs or utility models, are reserved to WABCO. In the event of registered designs or utility models, we also reserve the right to alter the contents of the preceding paragraph and to request return of this document, without any right to the holder to claim compensation.

Questo documento non può essere riprodotto o trasmesso, neppure parzialmente, né utilizzato o comunicato il suo contenuto, se non espressamente autorizzati. Sono riservati alla WABCO tutti i diritti, compresi quelli derivanti da brevetti o da registrazioni di disegni o modelli di utilità, anche nei casi in cui la WABCO non abbia ottenuto tali registrazioni. Si riserva inoltre il diritto di modificare il contenuto del punto precedente e di richiedere la restituzione di questo documento senza che il detentore abbia diritto a qualsiasi risarcimento.

Este documento no puede ser copiado ni divulgado, ni su contenido ni datos que lo acompañan, ni utilizarse o comunicarse su contenido sin su autorización. Todos los derechos de propiedad industrial, incluyendo los derechos de patente y de registro de diseño o modelo, están reservados a WABCO. En caso de registros de diseño o modelo, WABCO también se reserva el derecho de modificar el contenido del punto anterior y el derecho a exigir la devolución de este documento sin que el titular tenga derecho a indemnización.

| General Specifications: JED-354-1 , Size ISO 14405 LP | | | | | |