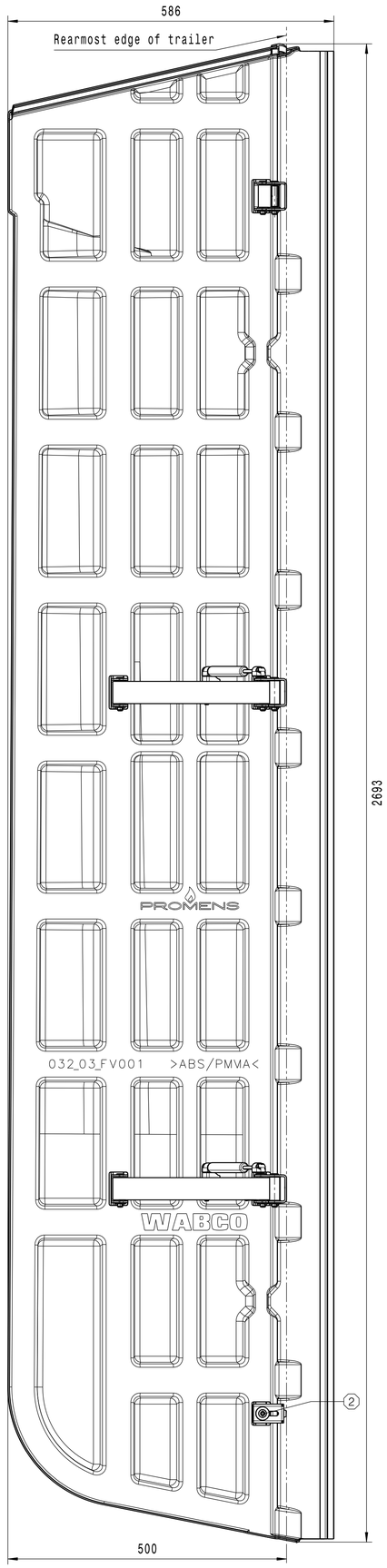

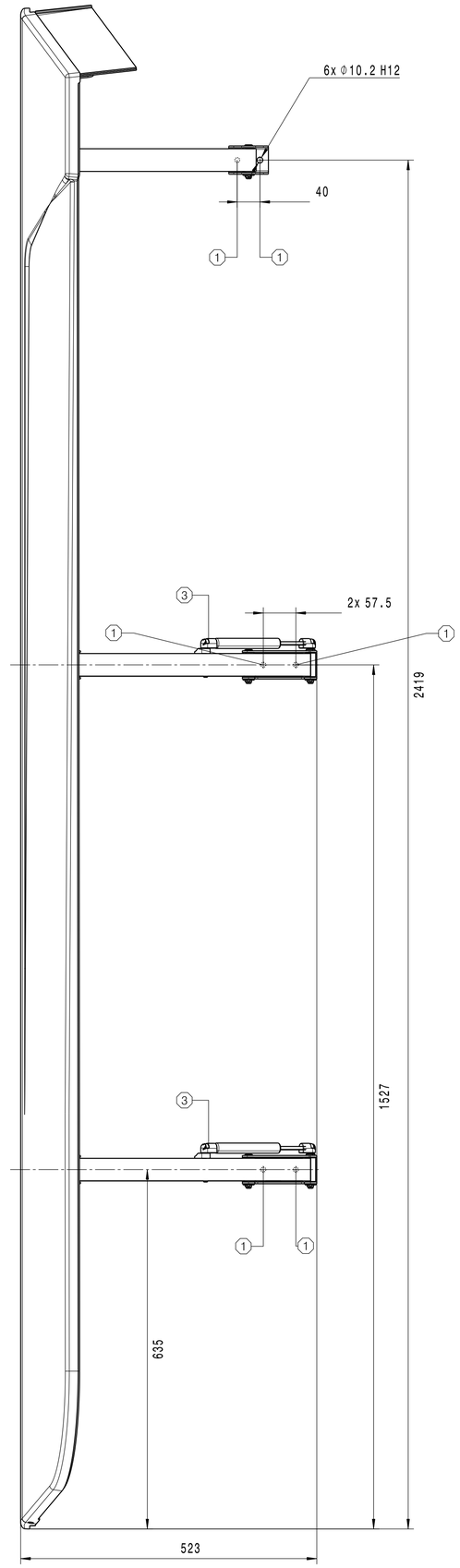

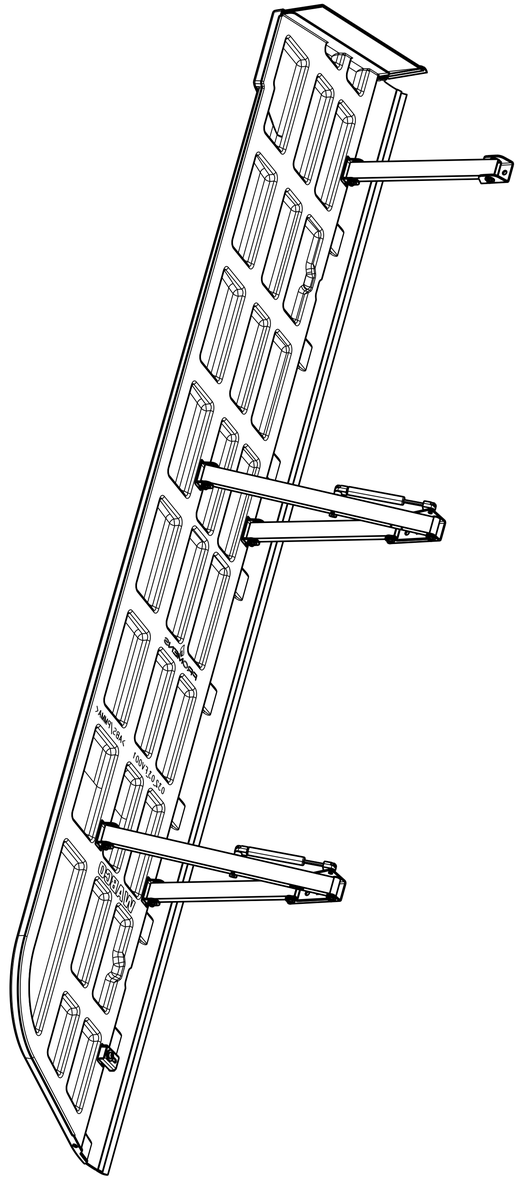

(1) = Min. required torque 25 ± 3 Nm designed for M10 thread. Fastener selection and strength prove of this connection needs to performed by customer.
Customer is responsible to avoid damages at his trailer door. Customer should do his own screw calculation.

(2) = Tightening moment 10 ± 2 Nm.

(3) = Cable tie and metal holder must NOT be removed until gas spring head is secured into bracket ball-connector.

BEFORE MOUNTING, PLEASE CHECK THE OPTIFLOW™ TAIL INSTALLATION MANUAL FOR FURTHER DETAILS
CONSULT COMPLETE ASSEMBLY INSTALLATION DRAWING FOR DETAILED HOLE POSITIONING

General Specifications: JED-334-1, Size ISO 14405 LP
Further Technical Data:
Doc. Code: | Sheet: | To
General Tolerances JED-261

Class 1)	Range of Nominal Dimensions (` mm) ≤ 50	> 50 ≤ 180	> 180 ≤ 400	> 400
Fine	0.5	1.0	1.5	2.0
Medium	1.0	2.0	3.0	4.0
Coarse	2.0	3.5	5.0	6.5

Tapped Holes acc. -
1) Tolerance Class Applied Crossmarked

Copyright WABCO ®

Date	Signature
Drawn 2015-03-27	Evektor
Checked 2015-07-15	L. Ramirez
Expert	L. Ramirez

WABCO

EU50 SP 2700 L

Manufacturer code: 032_03_SV384

Mass	Scale	Material No.	Date of first issue		
24.3 KG	1:5	1812200060	Doc.Code 005	Language EN	Sheet 1/1
Size A 1	CAD System CATIA		EDN-No. -	Revision -	Techn. Resp.

Replacement for -

100mm

Toute Communication ou reproduction de ce document, toute exploitation ou communication de son contenu sont interdites, sauf autorisation écrite. Tous droits de propriété industrielle réservés, notamment en matière de brevets et de modèles.
Non è permesso comunicare o fare copie di questo documento, né utilizzare o comunicare il contenuto a terzi senza autorizzazione scritta. Tutti i diritti di proprietà industriale sono riservati, in particolare quelli di brevetto e di modello.
Mededeling aan derden of kopiëring dezer documenten, Verwerking en Mededeling zijn inhoudelijk niet geoorloofd, tenzij uitdrukkelijk toegestaan. Alle rechten voor de industriële eigendom worden uitdrukkelijk voorbehouden.
Copying of this document and giving it to others and the use or communication of the contents thereof, are forbidden without express authority. Offenders are liable to the payment of damages. All rights are reserved in the event of the grant of patent or registration of a utility model or design. This document is the subject of copyright.