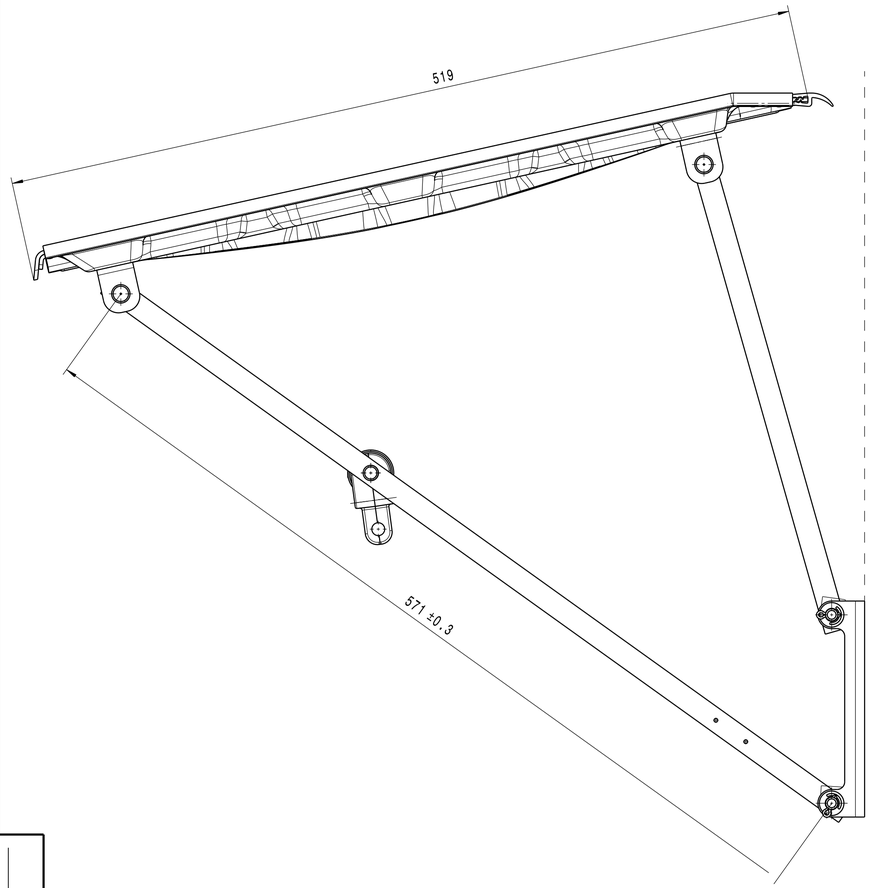

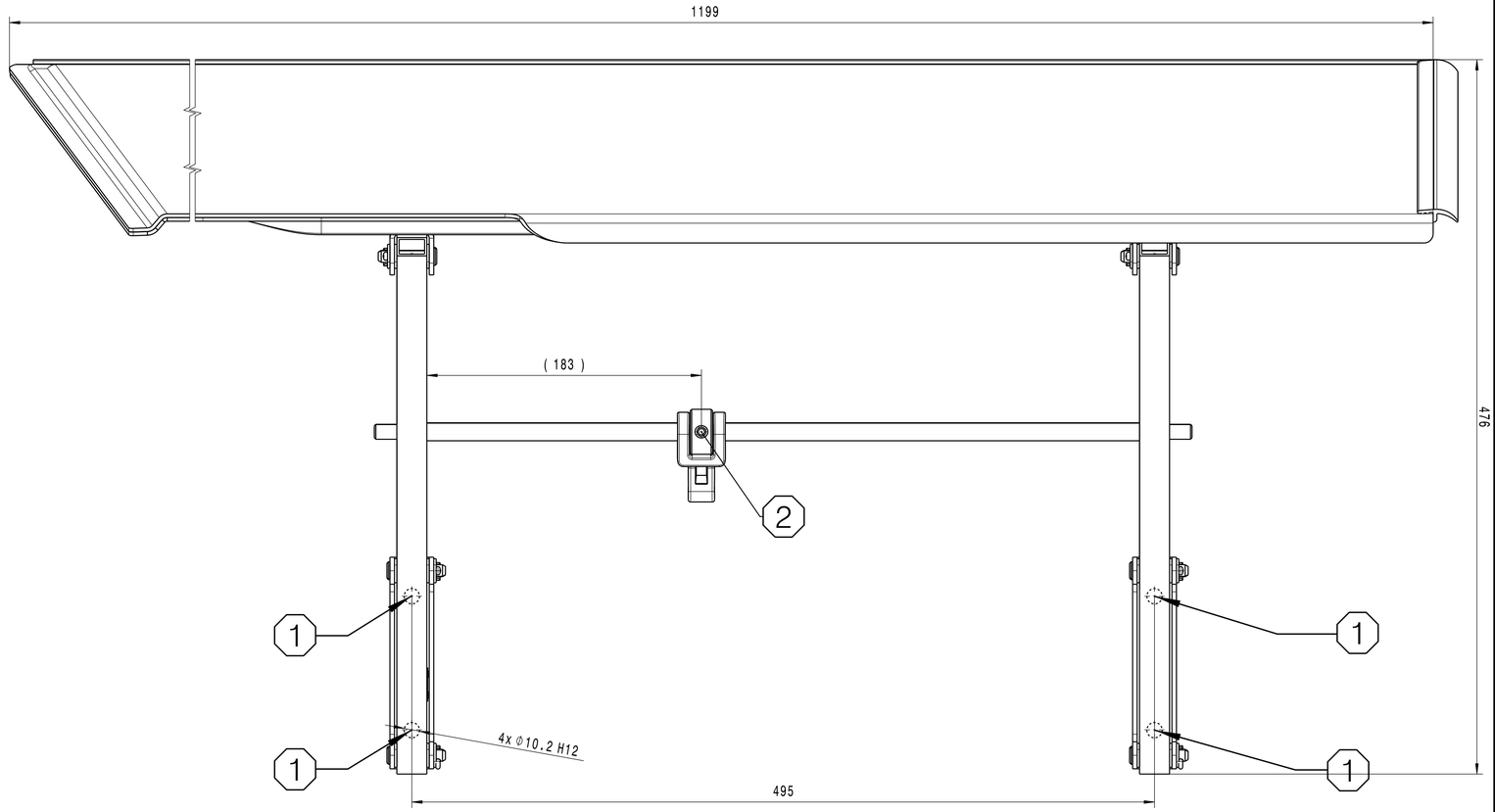

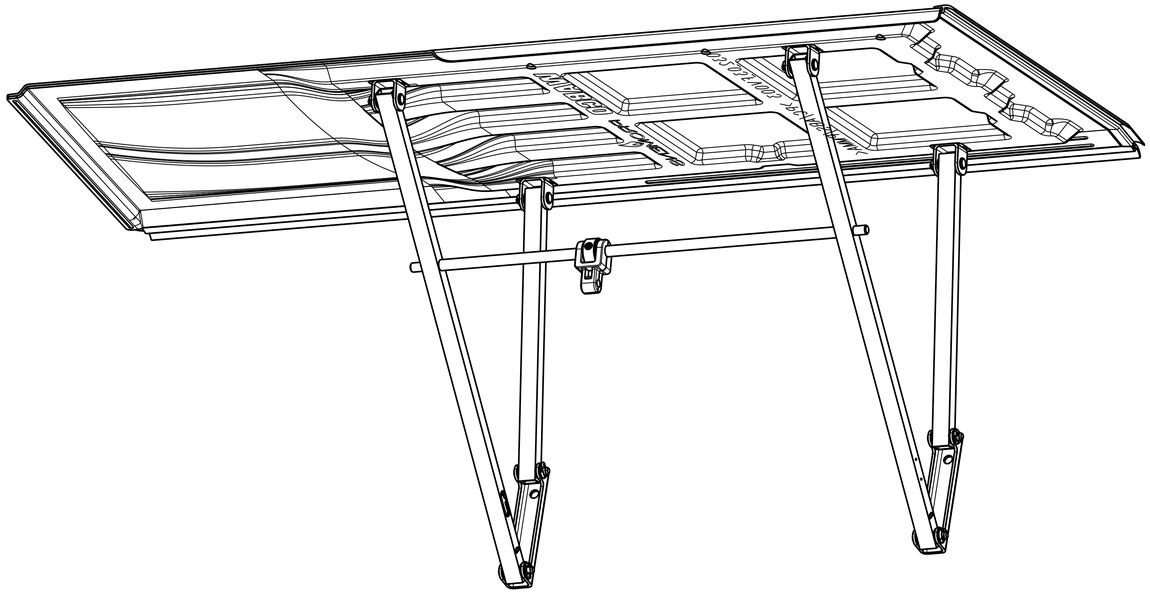

(1) = Min. required torque 25 ± 3 Nm designed for M10 thread. Fastener selection and strength prove of this connection needs to performed by customer.
Customer is responsible to avoid damages at his trailer door. Customer should do his own screw calculation.

(2) = Secure by Loxeal 55-03 glue.

BEFORE MOUNTING, PLEASE CHECK THE OPTIFLOW™ TAIL INSTALLATION MANUAL FOR FURTHER DETAILS
CONSULT COMPLETE ASSEMBLY INSTALLATION DRAWING FOR DETAILED HOLE POSITIONING

General Specifications: JED-334-1 , Size ISO 14405 LP						
Further Technical Data:						
Doc. Code:			Sheet: To			
General Tolerances JED-261						
	Range of Nominal Dimensions (mm)					
Class 1)	≤ 50	> 50 ≤ 180	> 180 ≤ 400	> 400		
Fine	X	0.5	1.0	1.5	2.0	
Medium		1.0	2.0	3.0	4.0	±3-
Coarse		2.0	3.5	5.0	6.5	
Tapped Holes acc. -						
1) Tolerance Class Applied Crossmarked						

Copyright WABCO ©

Date	Signature
Drawn 2015-03-27	Evektor
Checked 2015-07-15	l. Ramirez
Expert L. Ramirez	

WABCO

EU50 TP reefer L

Manufacturer code: 032_03_SV377

Mass	Scale	Material No.	Date of first issue:		
7.4 KG	1:2	1812300040	Doc.Code 005	Language EN	Sheet 1/1
Size A1	CAD System CATIA				

EDN-No.	Revision	Techn. Resp.	Replacement for
-	-		-

100mm

Toute Communication ou reproduction de ce document, toute exploitation ou communication de son contenu sont interdites, sauf autorisation écrite. Tous droits de propriété industrielle réservés, notamment en matière de brevets et de modèles.

Jede Weitergabe sowie Vervielfältigung dieser Unterlage, Verwertung und Mitteilung ihres Inhalts nicht gestattet, soweit nicht ausdrücklich zugesichert. Alle Rechte für den Fall der Patenterteilung oder Gebrauchsmuster-Eintragung vorbehalten.

Mon a pensecus conseguere a libre e signature questo documento, ne utilizzare il contenuto o rendere conosce altri a meno autorizzazione scritta. Tutti i diritti di proprietà industriale sono riservati, in particolare quelli di brevetto o di modello.

Está reservado todo tipo de derechos de propiedad industrial, en particular los de patente o modelo.

Copying of this document and giving it to others and the use or communication of the contents thereof, are forbidden without express authority. Offenders are liable to the payment of damages. All rights are reserved in the event of the grant of patent or registration of a utility model or design. This document is the subject of copyright.