<1>	SAFETY CHARACTERISTICS	0
<2>	SIGNIFICANT CHARACTERISTICS	0
<CI>	CUSTOMER INTERFACE	9

SURFACE PROTECT.
表面処理

I	JED-240-3
II	JED-256-1
III	JED-240-2

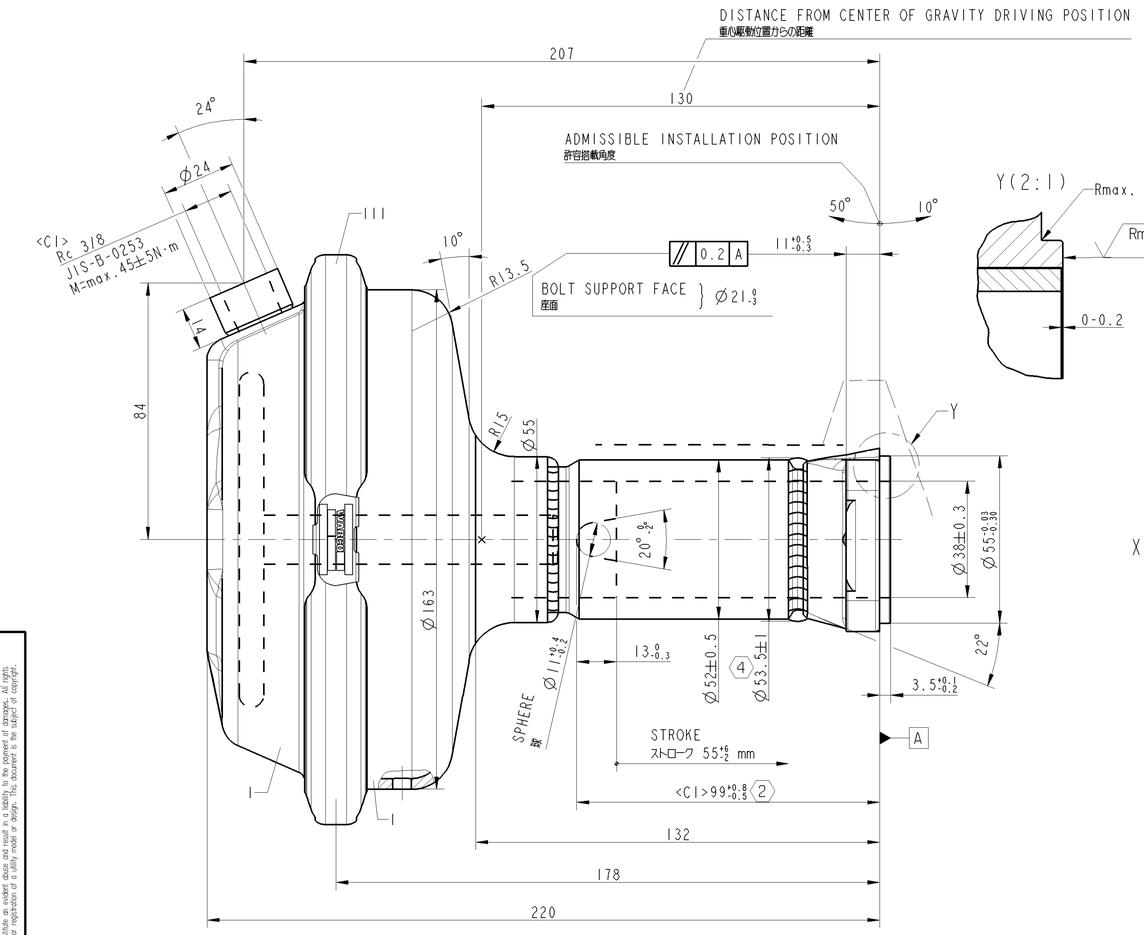

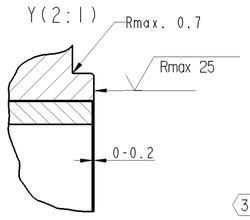

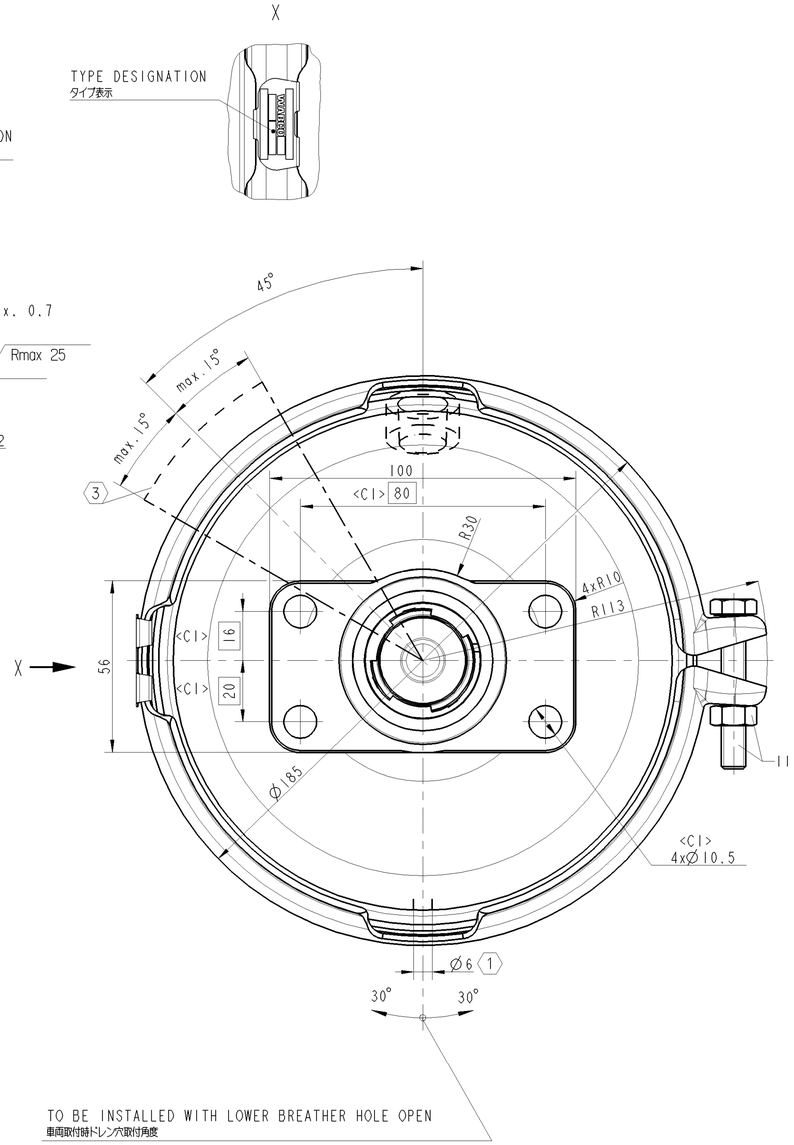

1 OPEN BREATHER HOLE
ドレン穴開放1ヶ所

2 AT A SPRING FORCE OF } 150N
測定時スプリング力

3 START AND END OF THE WELD SEAM
フランジ溶接部オーバーラップ位置範囲

4 EXCEPTION START AND END OF THE WELD SEAM
溶接オーバーラップ範囲を除く

THERMAL RANGE OF APPLICATION } -40°C...+80°C
使用温度範囲

MEDIUM : AIR
作動流体 : 空気

SERVICE PRESSURE } Pe max. = 1.02MPa
サービスブレーキ常用最高圧力

(TEMPORARILY } Pe max. = 1.3MPa)
最高圧力

MAIN VIEWS REFER TO DIMENSIONS ONLY
メインビューは寸法のみを表示

POSITION OF COMPONENTS SEE REPRESENTATION OF VARIANTS
構成部品の位置はバリアント図を参照のこと

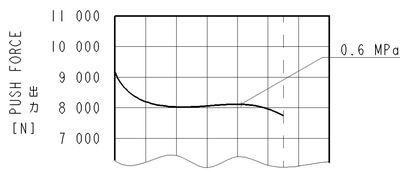

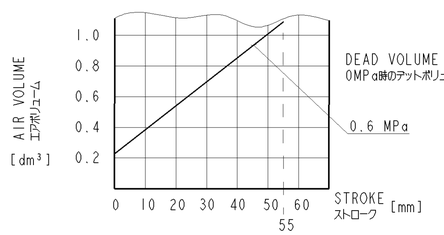

DEAD VOLUME AT 0 MPa :
0MPa時のデッドボリューム :
} 0.076 dm³

VARIANT
バリアント図

323 077 050 0	323 077 053 0	323 077 054 0
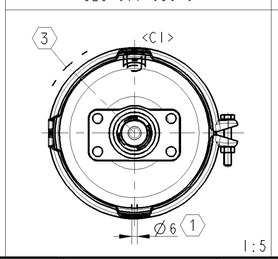	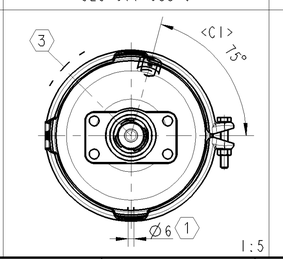	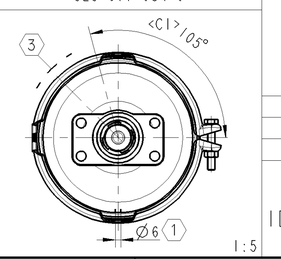

323 077 054 0	LH	4.4
323 077 053 0	RH	4.4
323 077 050 0	-	4.4
WABCO IDENTIFICATION 識別	TYPE タイプ	5 MASS 重量 [kg]

General Specification: JED-334-0
Further Technical Data: 925 400 000 0
Doc. Code: 035 Sheet: 1 To 5

General Tolerances JED-261

Class 1)	Range of Nominal Dimensions (± mm) ≤ 50	> 50 ≤ 180	> 180 ≤ 400	> 400	∢
Fine	0.5	1.0	1.5	2.0	±3°
Medium X	1.0	2.0	3.0	4.0	
Coarse	2.0	3.5	5.0	6.5	

Tapped Holes acc.
1) Tolerance Class Applied Crossmarked

Copyright WABCO®

Date	Signature
Drawn 2021-03-25	Manabe
Checked 2021-03-26	Billsing
Expert	Numazawa

WABCO
BRAKE CHAMBER WEDGE 24
ブレーキチャンバウェッジ 24

Mass	Scale	Material No.	Date of first issue: 2021-03-26
5 kg	1:1 (2:1)(1:5)	323 077 059 0	Doc.Code 053 / Language ML / Sheet 1/1
Size A 1	CAD System CREO	ECN-No. - / Revision - - / Techn. Resp. 5340_AM	Replacement for -

100mm

Non è permesso consegnare o fare o riprodurre questo documento, né utilizzarne il contenuto o rendere comunque noto a terzi senza esplicita autorizzazione. Tutti i diritti derivanti da brevetto o modello.
Copying of this document and giving it to others and the use or communication of the contents thereof, are forbidden without express authority. Offenders are liable to the payment of damages. All rights created by patent or registration of a utility model or design. This document is the subject of copyright.
Weitergabe sowie Vervielfältigung dieser Unterlage, Verwertung und Mitteilung ihres Inhalts nicht gestattet, soweit nicht ausdrücklich zugesichert. Zuwiderhandlungen verpflichten zu Schadensersatz. Alle Rechte für den Fall der Patent- oder Gebrauchsmustererteilung vorbehalten.