SURFACE PROTECTION	
I	JED-240-3
II	JED-256-1
III	JED-371
IV	AL , JED-259
V	RUBBER/PLASTIC
VI	JED-240-2
VII	JED-378-2
VIII	MS

<!> SAFETY CHARACTERISTICS	10
<> SIGNIFICANT CHARACTERISTICS	4
<CI> CUSTOMER INTERFACE	3

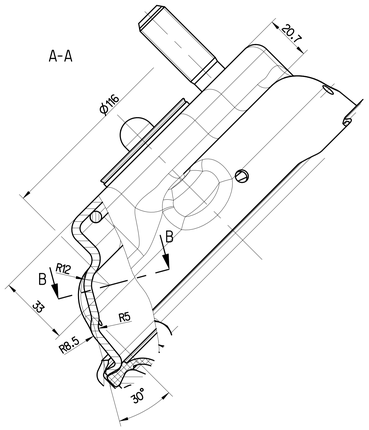

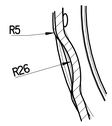

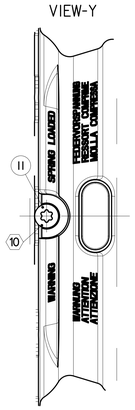

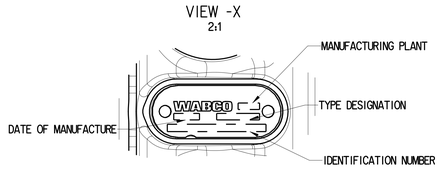

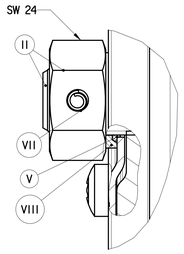

TECHNICAL DETAILS:

1. MEDIUM : AIR
2. THERMAL RANGE OF APPLICATION : -40°C....+80°C <!>
3. STROKE : MIN 64mm <!>
4. SERVICE BRAKING SYSTEM, WORKING PRESSURE : P_e max. =10.2 Bar (TEMPORARILY : P_e max. = 13 bar)
5. SPRING BRAKE CYLINDER , WORKING PRESURE : P_e max. = 10 bar (TEMPORARILY : P_e max. = 11 bar)
6. NOMINAL DIAMTER : MIN Ø 8.5
7. CORROSION RESISTANCE : 240 HOURS
8. MAIN VIEWS REPRESENT DIMENSION ONLY

PORT DETAILS	
PORT 11	SERVICE BRAKE INLET
PORT 12	SPRING BRAKE INLET

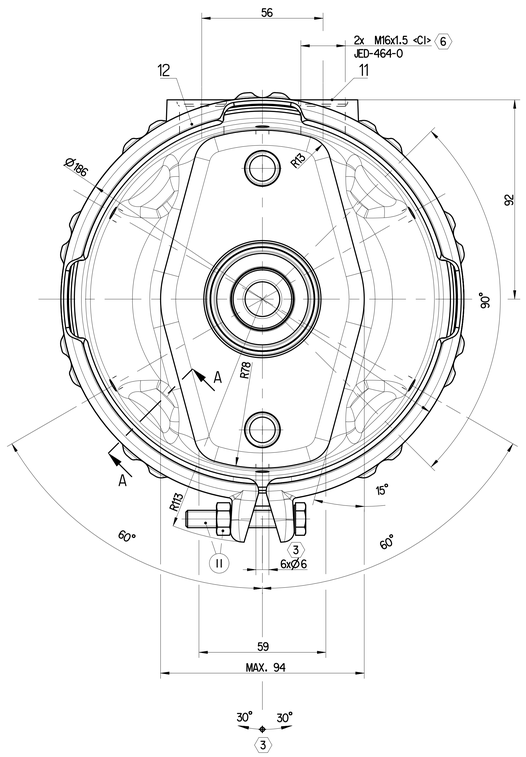

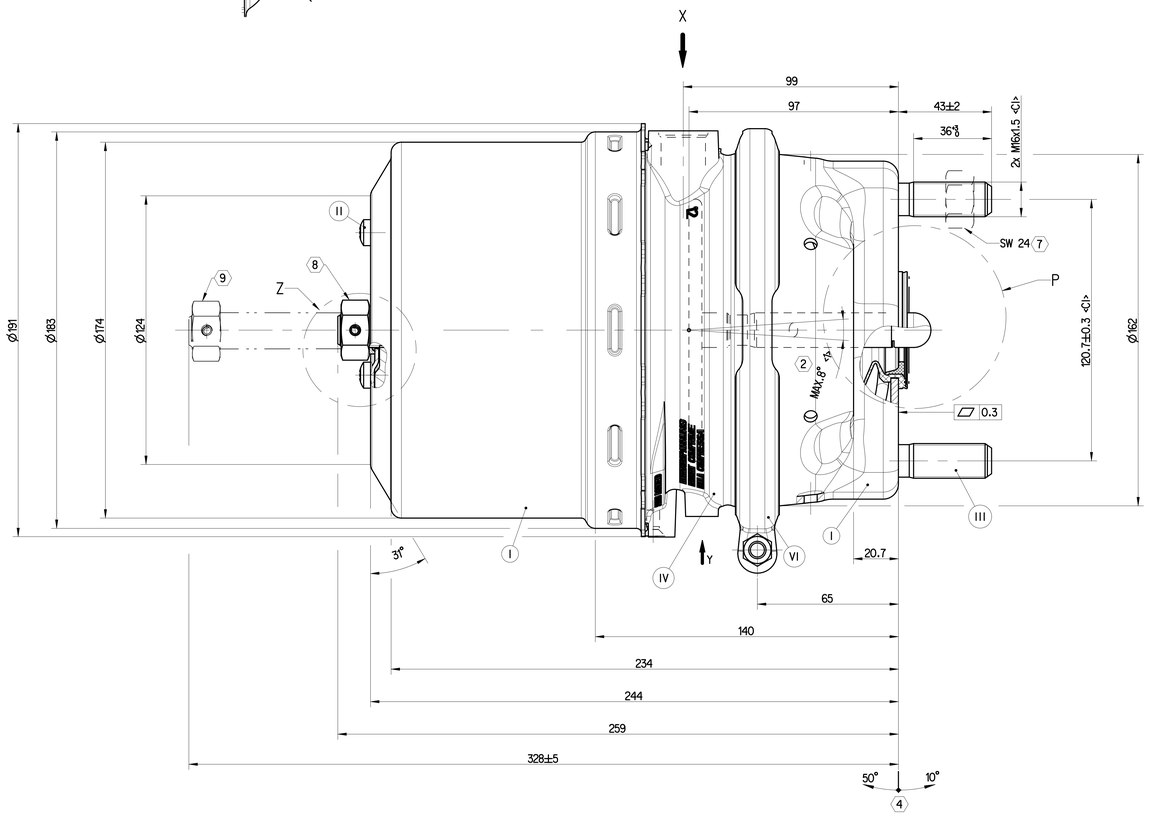

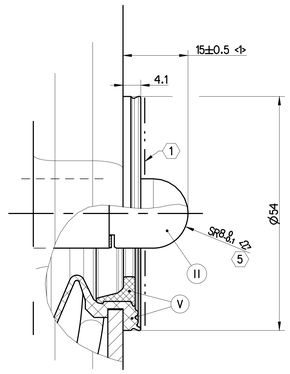

1 SEALING SURFACE

2 DEFLECTION MAX 8° AT STROKE 0mm <!>

3 TO BE INSTALLED WITH LOWER BREATHER HOLE OPEN <2>
ALL BREATHER HOLES TO BE OPEN

4 ADMISSIBLE INSTALLATION POSITION <2>

5 BALL : HARDENED <!>

6 TORQUE=34Nm MAX

7 TORQUE=210 $^{0}_{-30}$ Nm <!>

8 DRIVING POSITION TIGHTENING WITH: M=25 $^{+20}_{0}$Nm

9 RELEASE POSITION RELEASING WITH: M = MAX 75 Nm

10 LOCK

11 DELIVERY POSITION : IN RELEASED CONDITION <2>

12 POSITION OF THE COMPONENT SEE REPRESENTATION OF THE VARIANT <!>

GRAPH FOR INFORMATION ONLY

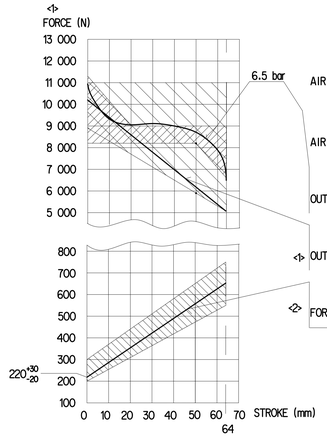

AIR VOLUME OF SERVICE BRAKE PART AT 2/3 OF ITS STROKE : ca. 0.80x10³ cm³

AIR VOLUME OF SPRING BRAKE PART : ca. 1.4x10³ cm³

OUTPUT FORCE OF SERVICE BRAKE PART AT

<!> OUTPUT FORCE OF SPRING BRAKE PART, RELEASE PRESSURE : pe 5.1 ±0.3 bar

<2> FORCE OF RETURN SPRING OF SERVICE BRAKE PART

325 000 001 0
12

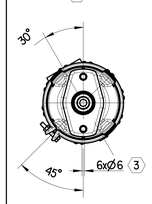

325 000 002 0
12

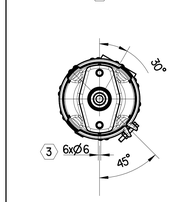

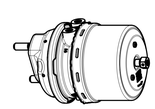

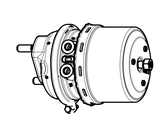

CIRCUIT DIAGRAM

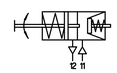

General Specifications: ISO 8015, JED-334-1, Size ISO 14405 LP							
Further Technical Data: 925 400 000 0							
Doc. Code: 035			Sheet: 1 To 5				
General Tolerances JED-261							
		Range of nominal dimensions in mm					
Class	1)	≤ 50	> 50 ≤ 180	> 180 ≤ 400	> 400		
Fine		±0.5	±1	±1.5	±2		
Medium	X	±1	±2	±3	±4	±3°	
Coarse		±2	±3.5	±5	±6.5		
Trapped Holes acc. JED-464-0							
1) Tolerance Class Applied Crossmarked							

Copyright ZF®

Date	Signature
Drawn 2024-01-17	Kaviya
Checked 2024-01-23	Saravanan

Dimensions in mm

TRISTOP -CYLINDER 24/24

Mass	Scale	Material No.	Date of first issue	Doc-Code	Language	Sheet
8.5 kg	1:1 (1x2.5:1)	325 000 003 0	2024-01-23	053	EN	1/1

Size	CAD System	ECN-No.	Revision	Index Repl.	Replacement for
A 0	CREO	-	-	5400_AM	-

100mm

Toda Comunicação ou reprodução de um documento, toda exploração ou comunicação de seu conteúdo não autorizada, não oferecerá o direito a indenização. Todos os direitos de propriedade industrial, quer registrados ou não, direitos de autor, direitos de desenho ou modelo, direitos de patente e direitos de marcas, ficam reservados.
Reproduction and communicating upon request, exploitation and distribution of the contents thereof are forbidden, unless permitted. Violators will be liable for damages. All rights are reserved in the event of the grant of a patent or the registration of a utility model or design. The contents of this document may not be used for the purpose of competition or in any way contrary to good faith.
Copyright of this document is held by ZF Friedrichshafen AG. Any reproduction and distribution of this document, in whole or in part, without the express consent of ZF Friedrichshafen AG is prohibited. Any violation will result in liability for damages. All rights are reserved in the event of the grant of a patent or registration of a utility model or design.