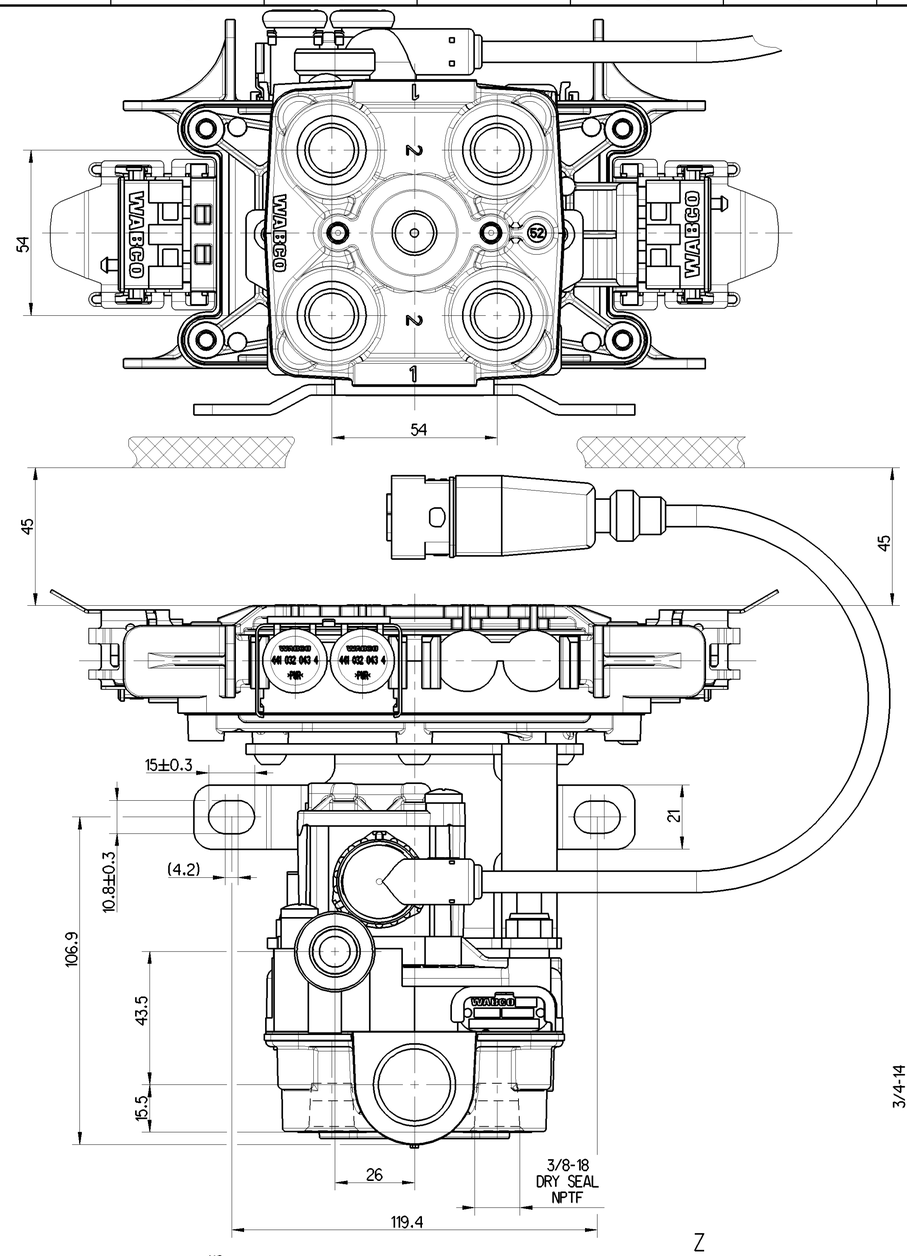


1:2

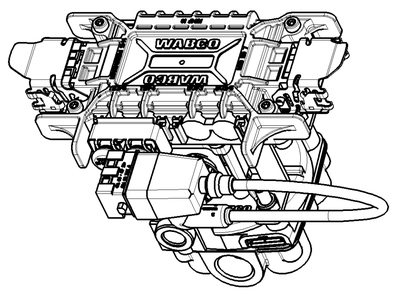


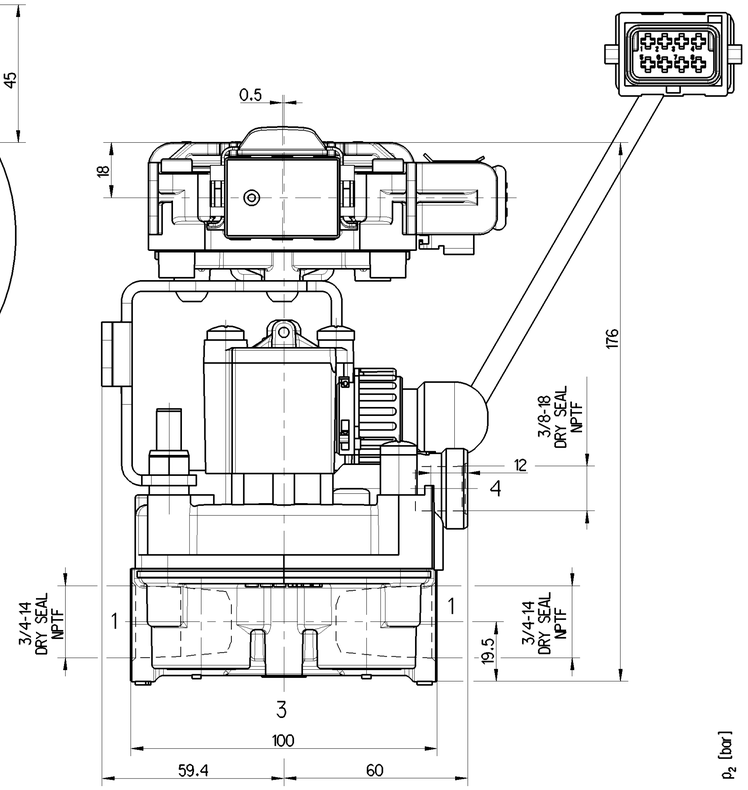


WORKING MEDIUM } AIR (CONTAINING WATER, OIL AND ALCOHOL)

WORKING PRESSURE } 10 BAR

MAX. PERMISSIBLE WORKING PRESSURE } 11 BAR

MAX. PERMISSIBLE WORKING PRESSURE (SUPPLY) } 13 BAR

VOLTAGE } $12^{+4V}_{-3,5V}$ V DC

DEGREE OF PROTECTION ACCORDING TO IEC 60 529 } COMPLETE DEVICE WITH MOUNTED PLUG } IP66

MAX. DEVIATION OF THE DEVICE FROM THE VERTICAL } ±15°

THERMAL RANGE OF APPLICATION } -40°C ..... +65°C / -40°F ..... +149°F

SHORT TERM RESISTANCE TO HEAT } 110°C (1h) / 230°F (1h)

FURTHER TECHNICAL DATA SEE PRODUCT SPECIFICATION, DOCUMENT NO. } 400 500 110 0 CODE 435 / 400 500 106 0 CODE 435 / 400 500 100 0 CODE 435

INSTALLATION INSTRUCTION FOR CABLES } 449 000 000 0 CODE 611

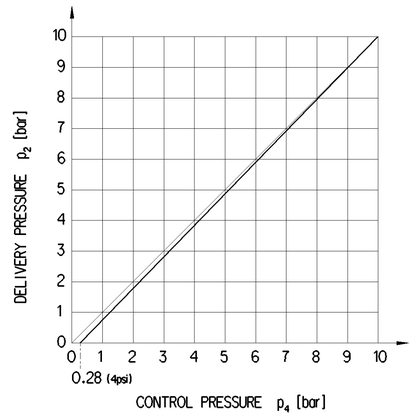


1 SUPPLY OF ENERGY

2 DELIVERY OF ENERGIY

3 EXHAUST

4 CONTROL

| IDENTIFICATION | MAX. SYSTEM |
|---|---|
| 400 500 101 0 | 2S/1M MSH |
| 400 500 104 0 | 2S/1M MAR |
| 400 500 106 0 | 2S/1M GIO |

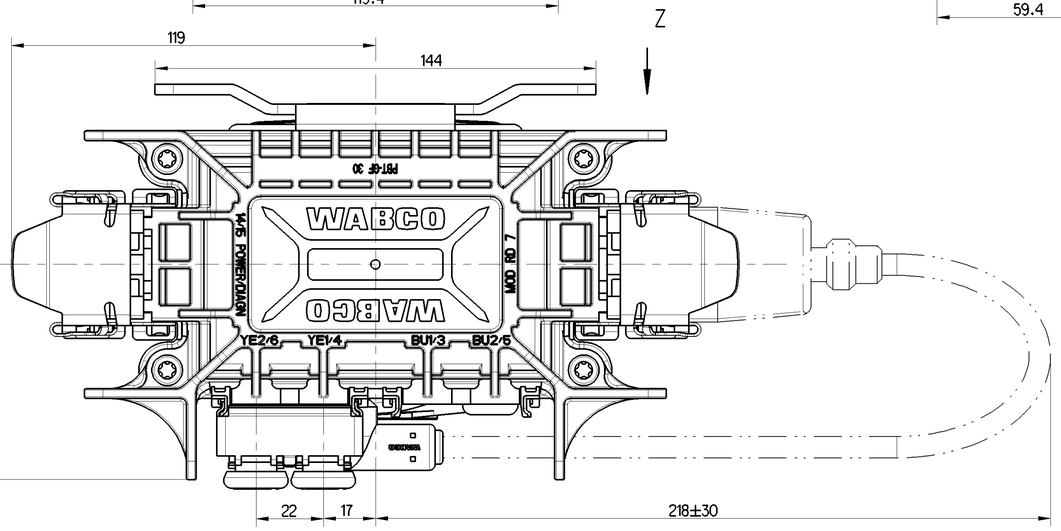


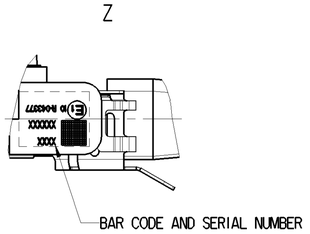


| | | | | | | |
|---|---|---|---|---|---|---|
| General Specification: JED-334-1 , Size ISO 14405 LP | | | | | | |
| Further Technical Data: | | | | | | |
| Doc. Code: | | | Sheet: | | To | |
| General Tolerances JED-261 | | | | | | |
| Range of Nominal Dimensions ( ± mm) | | | | | | |
| Class 1) | | ≤ 50 | > 50 ≤ 180 | > 180 ≤ 400 | > 400 | ∠ |
| Fine | | 0.5 | 1.0 | 1.5 | 2.0 | |
| Medium | | 1.0 | 2.0 | 3.0 | 4.0 | ±3° |
| Coarse | X | 2.0 | 3.5 | 5.0 | 6.5 | |
| Topped Holes acc. JED-152 | | | | | | |
| 1) Tolerance Class Applied Crossmarked | | | | | | |

Copyright WABCO®

| Date | Signature |
|---|---|
| Drawn | |
| 2017-11-16 | Bologa |
| Checked | |
| 2017-12-01 | Kaufmann |
| Expert | |
| Kaufmann | |

**WABCO**

TRAILER ABS

| Mass | Scale | Material No. | Date of first issue: |
|---|---|---|---|
| 2.1 KG | 1:1 1:2 | 400 500 110 0 | |
| Size | CAD System | | Doc.Code / Language / Sheet |
| A 1 | CREO | | 053 / EN / 1/2 |
| ECN-No. | Revision | Techn. Resp. | Replacement for |
| 173972 | 4 x H | 6291 | |

100mm

Tutte le informazioni qui riportate sono di proprietà WABCO e non possono essere riprodotte o rese note a terzi senza autorizzazione scritta. Qualsiasi violazione comporta il risarcimento dei danni. Tutti i diritti di proprietà industriale riservati, soprattutto quelli di brevetto e di modello.

Weitergabe sowie Vervielfältigung dieser Unterlage, Verwertung und Mitteilung ihres Inhalts nicht gestattet, soweit nicht ausdrücklich zugelassen. Zuwiderhandlungen verpflichten zu Schadensersatz. Alle Rechte für den Fall der Patent-, Gebrauchsmuster- oder Geschmacksmustereintragung vorbehalten.

Ce document est la propriété de WABCO et ne peut être reproduit ni communiqué à des tiers sans autorisation écrite. Toute infraction entraîne des dommages et intérêts. Tous droits de propriété industrielle réservés, notamment en matière de brevets et de modèles.

Non è permesso consegnare a terzi o riprodurre questo documento, né utilizzarne il contenuto o renderlo comunque noto a terzi senza autorizzazione scritta. Qualsiasi violazione comporta il risarcimento dei danni. Tutti i diritti di proprietà industriale riservati, soprattutto quelli di brevetto e di modello.

Copying of this document and giving it to others and the use or communication of the contents thereof, are forbidden without express authority. Offenders are liable to the payment of damages. All rights are reserved in the event of the grant of patent or registration of a utility model or design. This document is the subject of copyright.

| | POWER SUPPLY CONNECTOR |
|---|---|
| X1.1 | WARNING LAMP (FRAME GROUNDED) |
| X1.2 | SECONDARY POWER (STOPLIGHT) |
| X1.3 | PRIMARY POWER (PERMANENT) |
| X1.4 | GROUND |
| X1.5 | GENERIC IO D1 |
| X1.6 | POWER OUTPUT (DIAGNOSTIC TOOL) |
| X1.7 | DIAGNOSTIC LINE SAE J 1708 B |
| X1.8 | DIAGNOSTIC LINE SAE K 1708 A |

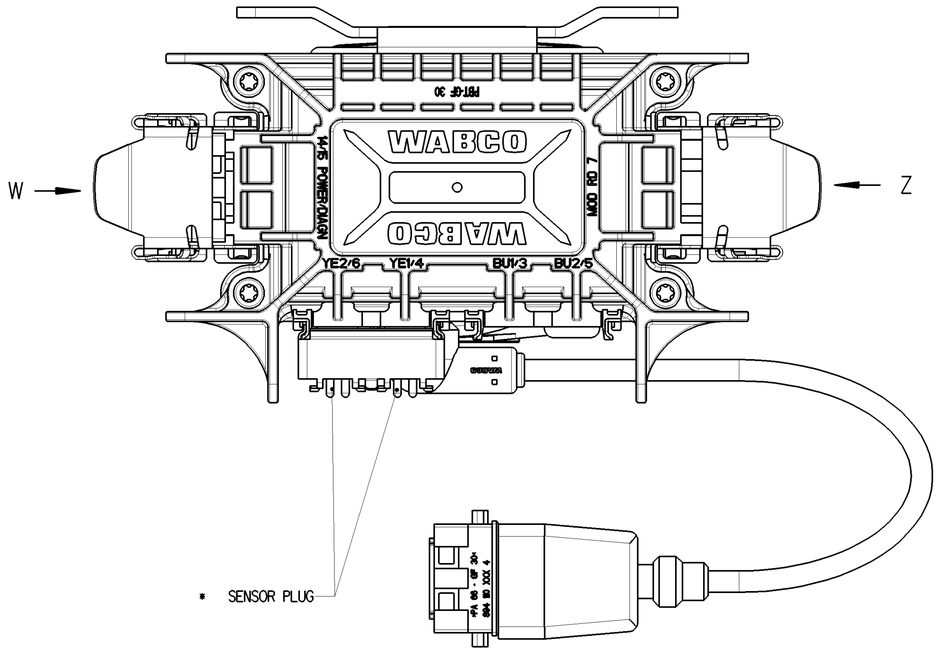


* USE ONLY THE LINES INCL. THE COUPLINGS DELIVERED BY WABCO AND/OR RELEASED BY WABCO

| | ADDITIONAL CONNECTOR X6 |
|---|---|
| X6.1 | GENERIC IO D2 |
| X6.2 | GENERIC IO A1 |
| X6.3 | GENERIC IO A2 |
| X6.4 | SENSOR SUPPLY 5V / 12V |
| X6.5 | GROUND |
| X6.6 | L-MODULATOR AV |
| X6.7 | L-MODULATOR EV |
| X6.8 | GENERIC IO D3 |

W
2:1
TURNED BY 90°

VIEW SHOWN WITHOUT CONNECTOR HOUSING

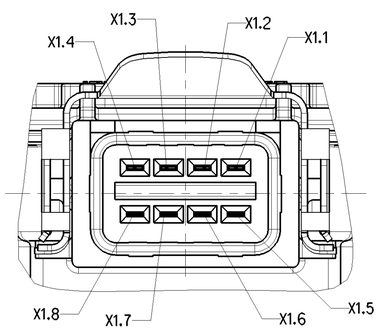


Z
2:1
TURNED BY 90°

VIEW SHOWN WITHOUT CONNECTOR HOUSING

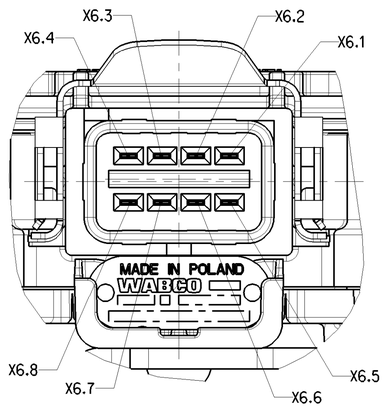


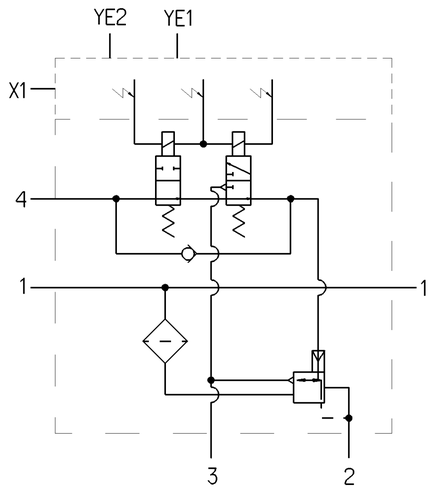


1 SUPPLY OF ENERGY

2 DELIVERY OF ENERGY

3 EXHAUST

4 CONTROL

| SYSTEM | COLOUR CODE |
|---|---|
| 2S/1M<br>MSH/MAR<br>GIO | 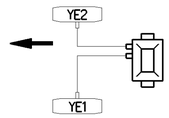 |



| | | | | | | |
|---|---|---|---|---|---|---|
| General Specification: JED-334-1 , Size ISO 14405 LP | | | | | | |
| Further Technical Data: | | | | | | |
| Doc. Code: | | | Sheet: | | To | |
| General Tolerances JED-261 | | | | | | |
| Class 1) | Range of Nominal Dimensions ( ± mm) ≤ 50 | > 50 ≤ 180 | > 180 ≤ 400 | > 400 | | |
| Fine | 0.5 | 1.0 | 1.5 | 2.0 | ±3° | |
| Medium | 1.0 | 2.0 | 3.0 | 4.0 | | |
| Coarse X | 2.0 | 3.5 | 5.0 | 6.5 | | |
| Tapped Holes acc. JED-152 | | | | | | |
| 1) Tolerance Class Applied Crossmarked | | | | | | |

Copyright WABCO®

| Date | Signature |
|---|---|
| Drawn 2017-11-16 | Balogo |
| Checked 2017-12-01 | Kaufmann |
| Expert Kaufmann | |

**WABCO**

TRAILER ABS

| Mass | Scale | Material No. | Date of first issue: |
|---|---|---|---|
| 2:1 KG | 1:1 2:1 | 400 500 110 0 | Doc.Code: 053 H; Language: EN; Sheet: 2/2 |
| Size: A 1 | CAD System: CREO | ECN-No.: 173972; Revision: 4 x H; Techn. Resp.: 6291 | Replacement for |

100mm

Toute Communication ou reproduction de ce document, toute exploitation ou communication de son contenu sont interdites, sauf autorisation écrite. Tous droits de propriété industrielle réservés, notamment en matière de brevets et de modèles.

Weitergabe sowie Vervielfältigung dieser Unterlage, Verwertung und Mitteilung ihres Inhalts nicht gestattet, soweit nicht ausdrücklich zugesichert. Zuwiderhandlungen verpflichten zu Schadenersatz. Alle Rechte für den Fall der Patent-, Gebrauchsmuster- oder Geschmacksmustereintragung vorbehalten.

Non è permesso consegnare o farli o riprodurre questo documento, né utilizzare il contenuto o renderlo comunque noto a terzi senza autorizzazione scritta. Tutti i diritti di proprietà industriale sono riservati, ivi compresi quelli di brevetto o modello.

Copying of this document and giving it to others and the use or communication of the contents thereof, are forbidden without express authority. Offenders are liable to the payment of damages. All rights are reserved in the event of the grant of patent or registration of a utility model or design. This document is the subject of copyright.