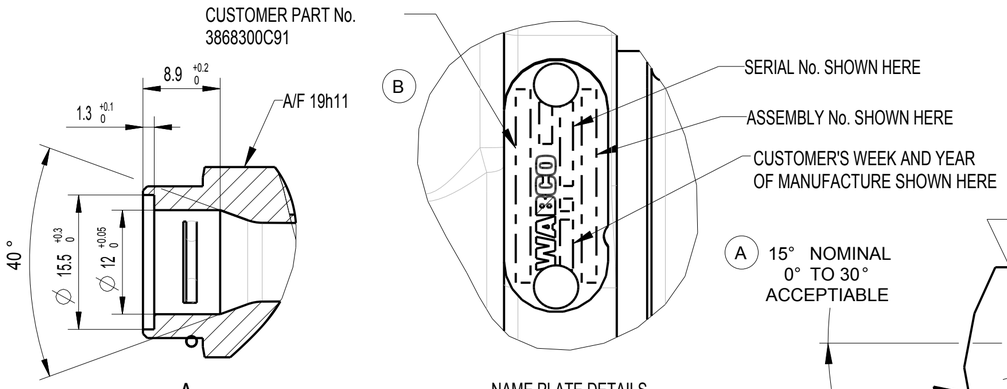

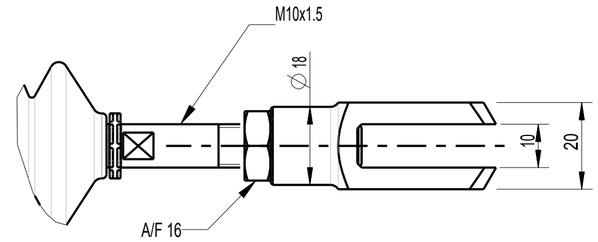

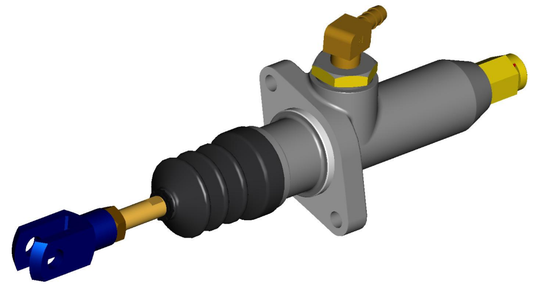

SCALE 0.5

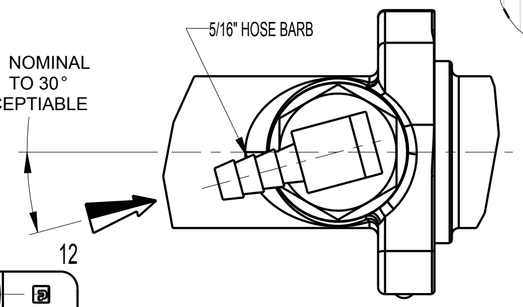

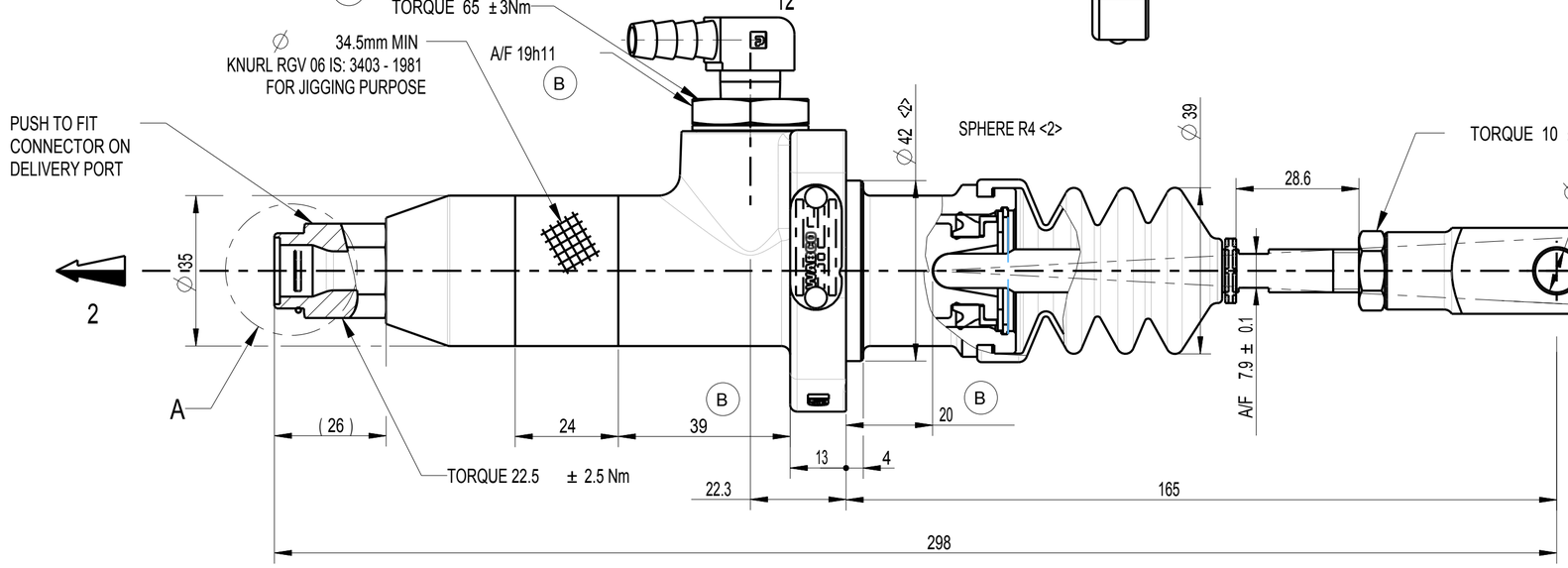

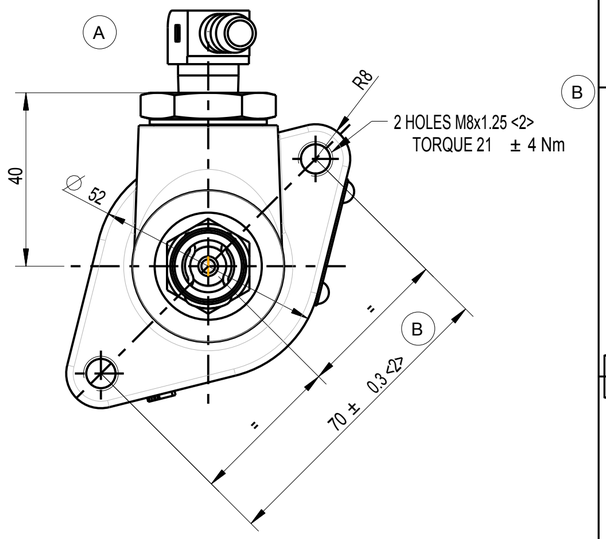

NOTE:

5 x <2> SPECIAL CHARACTERISTICS

INLET PORT TO BE FITTED WITH CLOSURE PLUG M927130 FOR STORAGE AND TRANSIT PURPOSE

TECHNICAL DATA:

(B) MAXIMUM STROKE : 35 mm <2>

NO STROKE LIMITER INSIDE

STROKE SHOULD BE LIMITED AT PEDAL <2>

CYLINDER BORE : ∅ 26.125 mm

MARKING OF PORTS						
12	OIL INLET	P2	DELIVEREY HYDRAULIC PRESSURE	NORMAL PRESSURE : 40 bar	MAXIMUM PRESSURE	100 bar
					USABLE HYDRAULIC VOLUME	18.7 +1 -1 cm 3
2	DELIVERY HYDRAULIC	HYDRAULIC FLUID	DOT3 - DOT4 SAE J 1703	THERMAL RANGE -40 °C....+80 °C		

SYMBOL

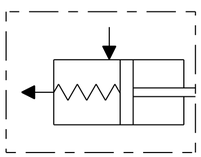

WORKING POSITION

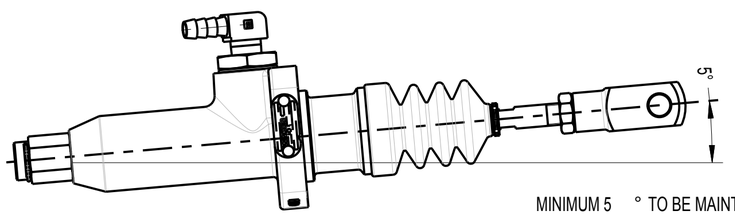

MINIMUM 5 ° TO BE MAINTAINED

1:2

DCN-NO.	REV.	DATE
113404	10xB	08/23/10
112045	2xA	03/26/10

SOLID MODEL DRAWING
METRIC IN MM

	DATE	SIGNATURE
DRAWN:	03/11/10	CORCORAN
CHECKED:	03/11/10	CORCORAN
RELEASE:	03/11/10	111877

MERITOR WABCO
Vehicle Control Systems

MASTER CYLINDER
CLUTCH
NAVISTAR 3868300C92 (B)

MASS	SCALE	PRODUCT IDENTIFICATION NO.	EDC CODE	DOC CODE	SHEET
KG	1.0	400 850 910 0	0799	005	1/1
SIZE	T.R.I.				
A 2	120				

DESIGN GROUP	SHAPE CODE	REPLACEMENT FOR
VDC		

100mm

EXPERT CODE

PRODUCT TYPE

COPYING OF THIS DOCUMENT AND GIVING IT TO OTHERS AND THE USE OR COMMUNICATION OF THE CONTENTS THEREOF, ARE FORBIDDEN WITHOUT EXPRESS AUTHORITY. OFFENDERS ARE LIABLE TO THE PAYMENT OF DAMAGES. WE RESERVE ALL RIGHTS IN THE EVENT OF THE GRANT OF PATENT OR REGISTRATION OF A UTILITY MODEL OR DESIGN. THIS DOCUMENT IS THE SUBJECT OF COPYRIGHT