| | |
|---|---|
| <1> SAFETY CHARACTERISTICS | 0 |
| <2> SIGNIFICANT CHARACTERISTICS | 0 |

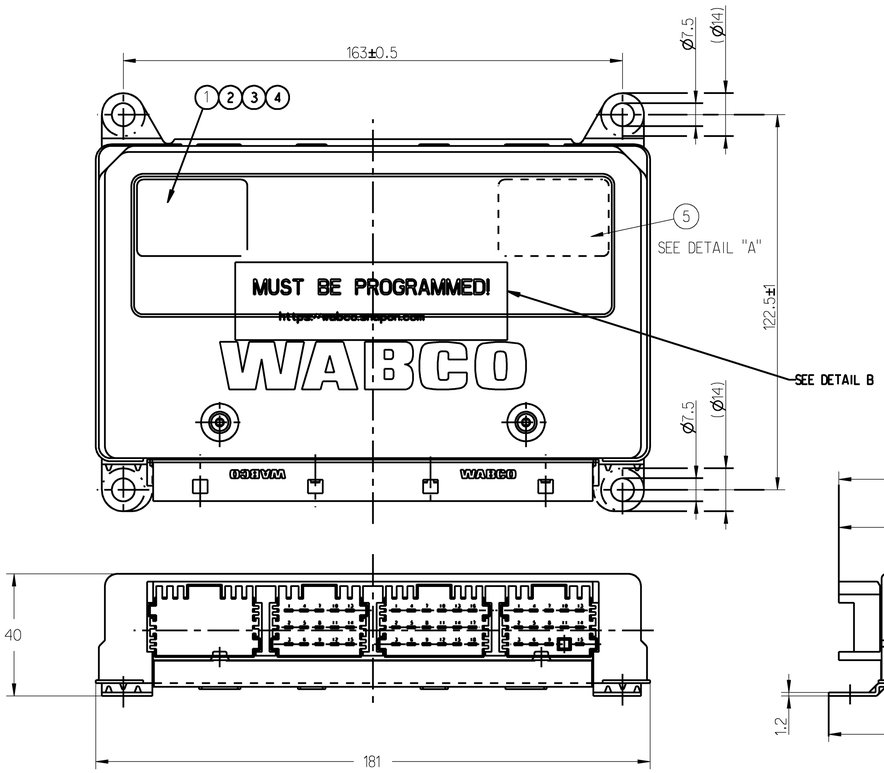


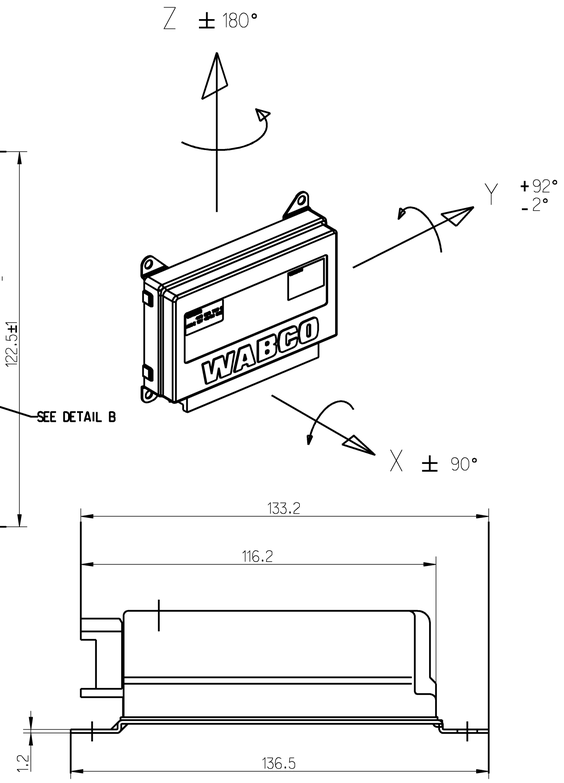


MALE MULTIPOINT CONNECTOR : SURFACE PROTECTION : TINNED
MESSERLEISTE : OBERFLAECHENSCHUTZ : VERZINNT
CONNECTEUR MALE MUNTIBROCHE: PROTECTION DE SURFACE : ETAME
SPINE MULTIPA: PROTEZIONE SUPERFICIALE : STAGNATO

SERIAL NUMBER GREATER THAN :
① FORTSCHRITTZAHL GROESSER ALS : 0
NUMERO DE SERIE PLUS GRAND QUE :
NUMERO DI SERIE PIU GRANDE DI :

DATE OF MANUFACTURE :
③ HERSTELLDATUM : JED-226
DATE DE FABRICATION :
DATA DI FABRICAZIONE :

CUSTOMER LABEL : OPTIONAL
⑤ KUNDENAUFKLEBER : BELIEBIG
ETIQUETTE ADHESIVE DU CLIENT : A VOLONTE
ETICHETTA ADHESIVA DEL CLIENTE : A SCELTA

PRODUCTION PLACE:
② PRODUKTIONSSRAETTE: JED-2
LIUE DE FABRICATION:
LUOGO DI FABBRICAZIONE:

COUNTRY OF ORIGIN:
④ URGSPRUNGSLAND: JED-225
PAYS D'ORIGINE:
PAESE D'ORIGINE:

FOR FURTHER TECHNICAL DATA SEE PRODUCT SPECIFICATION
WEITERE TECHNISCHE DATEN SIEHE PRODUKTSPEZIFIKATION
POUR INFORMATION COMPLEMENTAIRES VOIR LES SPECIFICATION DU PRODUIT
PER INFORMAZIONI ULTERRIORI VEDI LASPECIFICAZIONE DEL PRODOTTO

CUSTOMER LABLE CONTAIN
THE FOLLOWING INFORMATION:

Ⓑ DESCRIPTION:
WABCO IDENTIFICATION NUMBER
ALONG WITH STANDARD PRODUCTION INFORMATION

VOLTAGE :
SPANNUNG : 12V ±25% DC ***
VOLTAGE :
VOLTAGGIO:

PROTECT TYPE :
SCHUTZART : IP 30 (IEC 529)
MODE DE PROTECTION :
MODO DI PROTECZIONE :

THERMAL RANGE OF APPLICATION :
THERM. ANWENDUNGSBEREICH : -40°C... +75°C
GAMME D' APPLICATION THERMIQUE :
CAMPO DI APPLICAZIONE THERMICA :

STORING TEMPERATURE :
LAGERTEMPERATUR : -40°C... +90°C ***
TEMPERATURE D' UTILISATION :
TEMPERATURA DI ESERCIZIO :

Ⓑ
DETAIL B

MUST BE PROGRAMMED!

https://wabco.snapon.com

NOTE:
"MUST BE PROGRAMMED!" ALONG WITH WEB ADDRESS FOR PROGRAMMING SHALL BE VISIBLE AND CENTERED ON LABEL.

Ⓑ
DETAIL A

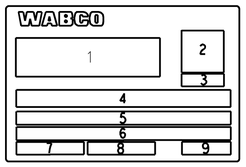


SCALE 2.0

| ITEM | DESCRIPTION |
|---|---|
| 9 | SERIAL NUMBER |
| 8 | |
| 7 | |
| 6 | DESCRIPTION LINE 2 |
| 5 | DESCRIPTION LINE 1 |
| 4 | WABCO PART NUMBER Ⓑ |
| 3 | DATE CODE (WK/YR) |
| 2 | BAR CODE |
| 1 | SMARTTRAC LOGO |

*TABLE 2 - LABEL FORMAT*

| PART NUMBER | CUSTOMER P/N | DESCRIPTION | NOTE |
|---|---|---|---|
| 400 864 566 0 | - | PABS ECU E4C 12V 6S6M PLC WITH ATC OPTION | FOR FURTHER TECHNICAL DATA SEE PRODUCT SPECIFICATION 035 |
| 400 864 565 0 | - | PABS ECU E4C 12V 6S4M PLC WITH ATC OPTION | |
| 400 864 008 0 | - | PABS ECU E4C 12V 6S6M PLC WITH ATC OPTION | |
| 400 864 007 0 | - | PABS ECU E4C 12V 6S4M PLC WITH ATC OPTION | |

*TABLE 1 - PART IDENTIFICATION*

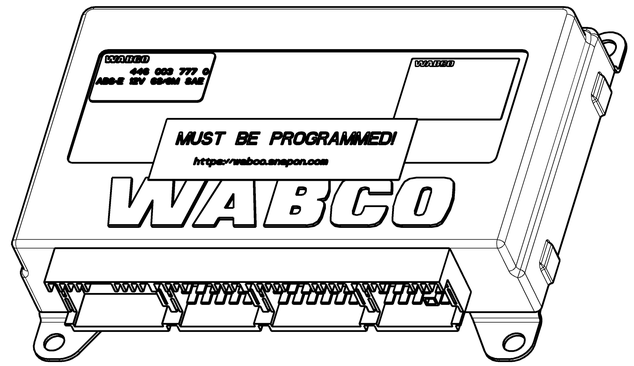


THIRD ANGLE PROJECTION

| | | | | | | | |
|---|---|---|---|---|---|---|---|
| General Specification: JED-334-0 | | | | | | | |
| Further Technical Data: | | | | | | | |
| Doc. Code: | | | | Sheet: | To | | |
| General Tolerances JED-261 | | | | | | | |
| | | Range of Nominal Dimensions ( ± mm) | | | | | |
| Class 1) | | ≤50 | > 50 ≤180 | >180 ≤400 | >400 | | |
| Fine | | 0.5 | 1.0 | 1.5 | 2.0 | ±3° | |
| Medium | X | 1.0 | 2.0 | 3.0 | 4.0 | | |
| Coarse | | 2.0 | 3.5 | 5.0 | 6.5 | | |
| Topped Holes acc. 0 | | | | | | | |
| 1) Tolerance Class Applied Crossmarked | | | | | | | |

Surface Protection: -

CUSTOMER PROGRAMMABLE ECU

Copyright WABCO®

| Date | Signature |
|---|---|
| Drawn | |
| 2019-06-28 | Srinivasaperumal |
| Checked | |
| 2019-06-28 | Gutierrez |
| Expert | |
| - | - |

WABCO®

PABS ECU E4C 12V
TABLE DRAWING

| Mass | Scale | Material No. | Date of first issue: 2015-04-02 | | |
|---|---|---|---|---|---|
| 0.6 KG | 1:1 | 400 864 001 0 | Doc.Code 053 | Language ML | Sheet 1/1 |
| Size A 1 | CAD System CREO | ECN-No. 501845 / Revision 5x B / Techn. Resp. 6300_MW | Replacement for - | | |

100mm

Tous droits de propriété intellectuelle réservés, notamment en cas de dépôts de brevets ou de modèles.
Alle Rechte für den Inhalt dieses Dokuments sowie die Verwendung dieses Dokuments und seines Inhalts sind vorbehalten.
Alle Rechte für den Inhalt dieses Dokuments sowie die Verwendung dieses Dokuments und seines Inhalts sind vorbehalten.
Copyright of this document and giving it to others and the use or communication of the contents thereof, are forbidden without express authority. Offenders are liable to the payment of damages. All rights are reserved in the event of the grant of patent or registration of a utility model or design. This document is the subject of copyright.