<1>	SAFETY CHARACTERISTICS	0
<2>	SIGNIFICANT CHARACTERISTICS	0

INSTALLATION POSITION:

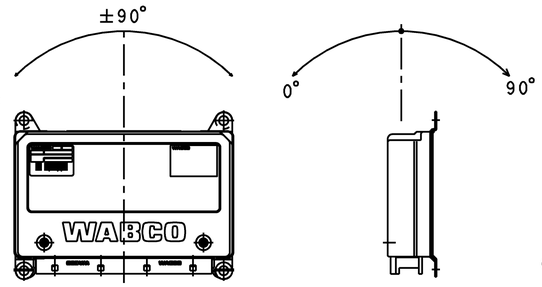

SCALE 0.4

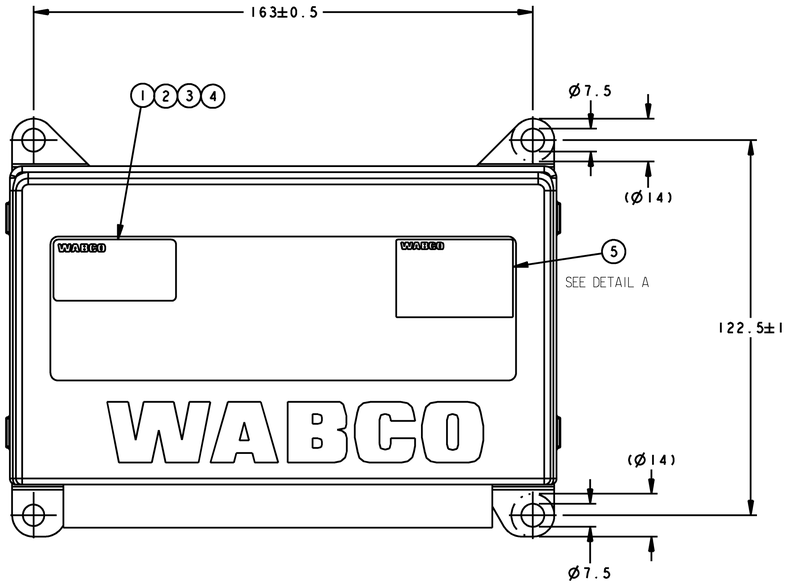

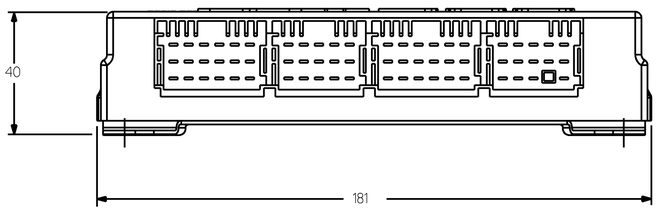

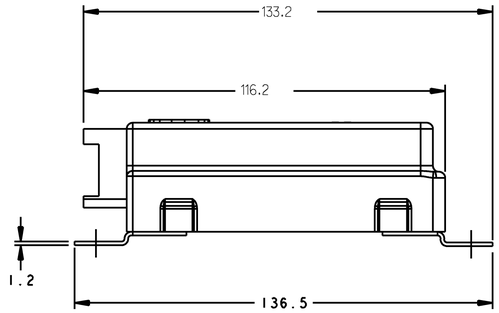

Ⓑ DETAIL A

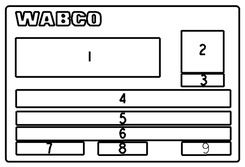

SCALE 2.0

ITEM	DESCRIPTION
9	SERIAL NUMBER
8	VEPS
7	CUSTOMER PN
6	DESCRIPTION LINE 2
5	DESCRIPTION LINE 1
4	WABCO PART NUMBER Ⓑ
3	DATE CODE (WK/YR)
2	BAR CODE
1	SMARTTRAC LOGO

TABLE 2 - LABEL FORMAT

NOTE:
LABEL INFORMATION TO BE LOCATED IN
THE GENERAL LOCATION AS SHOWN ON THE LABEL

PART NUMBER	DESCRIPTION	BAUD RATE	NOTE
400 867 009 0	PABS ECU E8C 12V 6S6M HSA ATC PLC	500 KBAUD	FOR FURTHER TECHNICAL DATA SEE PRODUCT SPECIFICATION 035
400 867 008 0	PABS ECU E8C 12V 6S4M HSA ATC PLC		
400 867 007 0	PABS ECU E8C 12V 4S4M HSA ATC PLC		
400 867 006 0	PABS ECU E8C 12V 6S6M XBR HSA ESC ATCPLC		
400 867 005 0	PABS ECU E8C 12V 6S6M XBR ESC ATC PLC		
400 867 004 0	PABS ECU E8C 12V 6S4M XBR HSA ESC ATCPLC		
400 867 003 0	PABS ECU E8C 12V 6S4M XBR ESC ATC PLC		
400 867 002 0	PABS ECU E8C 12V 4S4M XBR HSA ESC ATCPLC		
400 867 001 0	PABS ECU E8C 12V 4S4M XBR ESC ATC PLC		

TABLE 1 - PART IDENTIFICATION

MALE MULTIPOINT CONNECTOR: SURFACE PROTECTION: TINNED
MESSERLEISTE: OBERFLAECHENSCHUTZ: VERZINNT
CONNECTEUR MALE MULTIBROCHE: PROTECTION DE SURFACE: ETAME
SPINE MULTIPA: PROTEZIONE SUPERFICIALE: STAGNATO

SERIAL NUMBER GREATER THAN:
① FORTSCHRITTZAHL GROESSER ALS: 0
NUMERO DE SERIE PLUS GRAND QUE:
NUMERO DI SERIE PIU GRANDE:

DATE OF MANUFACTURE:
③ HERSTELLDATUM: JED-226
DATE DE FABRICATION:
DATA DI FABBRICAZIONE:

CUSTOMER LABEL: OPTIONAL
⑤ KUNDENAUFKLEBER: BELIEBIG
ETIQUETTE ADHESIVE DU CLIENT: A VOLONTE
ETICHETTA ADESIVA DEL CLIENTE: A SCELTA

PRODUCTION PLACE:
② PRODUKTIONSSTAETTE: JED-225
LIEU DE FABRICATION:
LUOGO DI FABBRICAZIONE:

COUNTRY OF ORIGIN:
④ URSPRUNGSLAND: JED-225
PAYS D'ORIGINE:
PAESE D'ORIGINE:

FOR FURTHER TECHNICAL DATA SEE PRODUCT SPECIFICATION
WEITERE TECHNISCHE DATEN SIEHE PRODUKTSPEZIFIKATION
POUR INFORMATION COMPLEMENTAIRES VOIR LES SPECIFICATIONS DU PRODUIT
PER INFORMAZIONI ULTERIORI VEDI LA SPECIFICAZIONE DEL PRODOTTO

CUSTOMER LABEL TO CONTAIN
THE FOLLOWING INFORMATION:

DESCRIPTION:
Ⓑ WABCO IDENTIFICATION NUMBER
ALONG WITH STANDARD PRODUCTION INFORMATION

VOLTAGE:
SPANNUNG: 12V ±25% DC
VOLTAGE:
VOLTAGGIO:

PROTECT TYPE:
SCHUTZART: IP 40 (IEC 529)
MODE DE PROTECTION:
MODO DI PROTEZIONE:

THERMAL RANGE OF APPLICATION:
THERM. ANWENDUNGSBEREICH: -40°..+85°C
GAMME D' APPLICATION THERMIQUE:
CAMPO DI APPLICAZIONE THERMICA:

STORING TEMPERATURE:
LAGERTEMPERATUR: -40°..+90°C
TEMPERATURE D' UTILISATION:
TEMPERATURA DI ESERCIZIO :

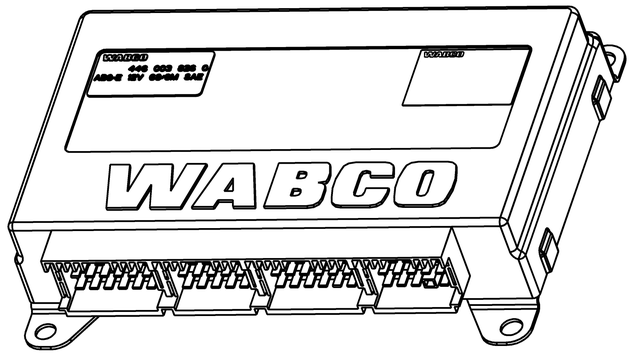

THIRD ANGLE PROJECTION

General Specification: JED-334-1 , Size ISO 14405 LP					
Further Technical Data:					
Doc. Code:		Sheet:	To		
General Tolerances JED-261					
Class 1)	Range of Nominal Dimensions (± mm) ≤ 50	> 50 ≤ 180	> 180 ≤ 400	> 400	∡
Fine	0.5	1.0	1.5	2.0	
Medium	1.0	2.0	3.0	4.0	±3°
Coarse	2.0	3.5	5.0	6.5	
Tapped Holes acc.					
1) Tolerance Class Applied Crossmarked					

Copyright WABCO®

Date	Signature
Drawn 2019-07-30	Srinivasaperumal
Checked 2019-07-30	Gutierrez
Expert -	

WABCO Ⓑ

PABS ECU E8C TABLE DRAWING

Mass	Scale	Material No.	Date of first issue: 2015-05-01		
0.6 KG	1:1	400 867 000 0	Doc.Code 053	Language MIL	Sheet 1/1
Size A 1	CAD System CREO				

ECN-No.	Revision	Techn. Resp.	Replacement for
501845	4x B	6300_MW	-

100mm

Non è permesso consegnare a terzi o riprodurre questo documento, né utilizzare il contenuto o renderlo comunque noto a terzi senza autorizzazione. Tutti i diritti di proprietà industriale riservati, relativamente ai disegni ed ai modelli.
E'fatto riserva di tutti i diritti derivanti da brevetti o modelli.

Copying of this document and giving it to others and the use or communication of the contents thereof, are forbidden without express authority. Proprietary and industrial property rights are reserved in the event of the grant of patent or registration of a utility model or design. This document is the subject of copyright.

Toute Communication ou reproduction de ce document, toute exploitation ou communication de son contenu sont interdites, sauf autorisation écrite. Tous droits de propriété industrielle réservés, notamment en matière de brevets et de modèles.

Weitergabe sowie Vervielfältigung dieser Unterlage, Verwertung und Mitteilung ihres Inhalts nicht gestattet, soweit nicht ausdrücklich zugestanden. Zuwiderhandlungen verpflichten zu Schadensersatz. Alle Rechte für den Fall der Patent- oder Gebrauchsmuster-Eintragung vorbehalten.