<1>	SAFETY CHARACTERISTICS	0
<2>	SIGNIFICANT CHARACTERISTICS	0
<CI>	CUSTOMER INTERFACE	0

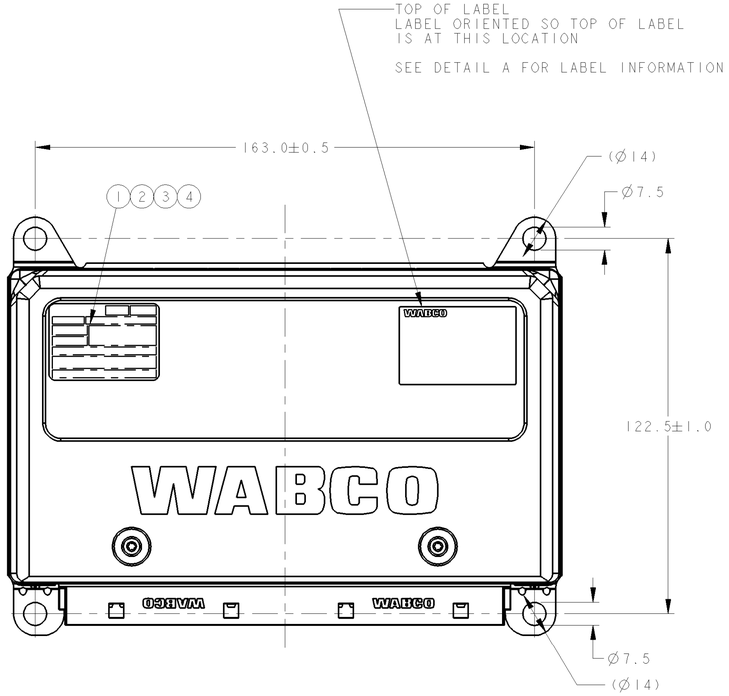

INSTALLATION POSITION:

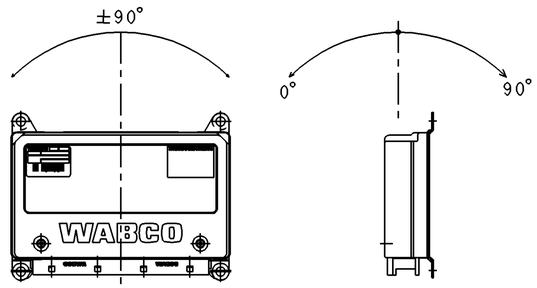

SCALE 0.4

MALE MULTIPOINT CONNECTOR: SURFACE PROTECTION: TINNED
MESSERLEISTE: OBERFLAECHENSCHUTZ: VERZINNT
CONNECTEUR MALE MULTIBROCHE: PROTECTION DE SURFACE: ETAME
SPINE MULTIPA: PROTEZIONE SUPERFICIALE: STAGNATO

SERIAL NUMBER GREATER THAN:
① FORTSCHRITTZAHL GROESSER ALS: 0
NUMERO DE SERIE PLUS GRAND QUE:
NUMERO DI SERIE PIU GRANDE:

DATE OF MANUFACTURE:
③ HERSTELLDATUM: JED-226
DATE DE FABRICATION:
DATA DI FABBRICAZIONE:

VOLTAGE:
SPANNUNG: 12V ±25% DC
VOLTAGE:
VOLTAGGIO:

PROTECT TYPE:
SCHUTZART: IP (IEC 529)
MODE DE PROTECTION:
MODO DI PROTEZIONE:

THERMAL RANGE OF APPLICATION:
THERM. ANWENDUNGSBEREICH: -40°..
GAMME D' APPLICATION THERMIQUE:
CAMPO DI APPLICAZIONE THERMICA:

STORING TEMPERATURE:
LAGERTEMPERATUR: -40°..+90°C
TEMPERATURE D' UTILISATION:
TEMPERATURA DI ESERCIZIO :

PRODUCTION PLACE:
② PRODUKTIONSSTAETTE: JED-225
LIEU DE FABRICATION:
LUOGO DI FABBRICAZIONE:

COUNTRY OF ORIGIN:
④ URSPRUNGSLAND: JED-225
PAYS D'ORIGINE:
PAESE D'ORIGINE:

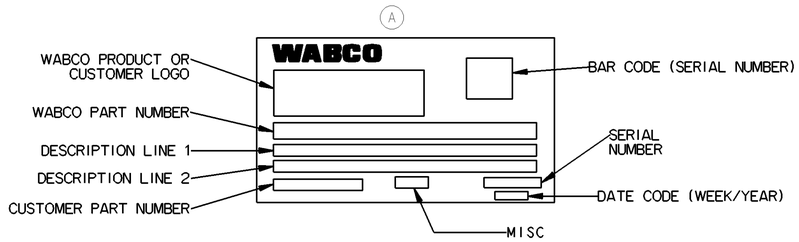

DETAIL A
DO NOT SCALE

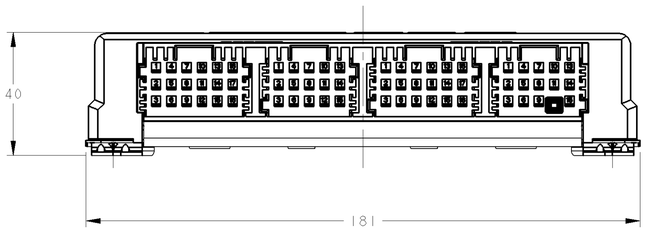

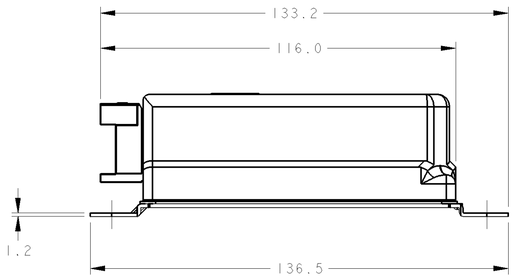

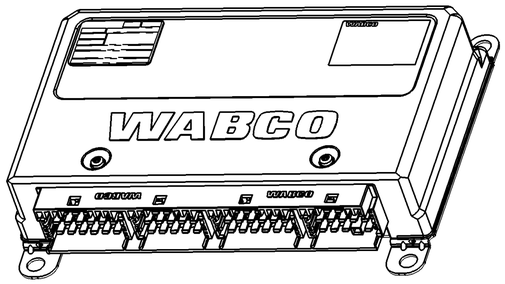

SCALE 0.8

THIRD ANGLE PROJECTION

PART NUMBER	CUSTOMER PART NUMBER	DESCRIPTION	BAUD RATE	NOTE
400 867 646 0	5103179	PABS ECU E8C 12V 4S4M ESC ATC	500K	FOR FURTHER TECHNICAL DATA SEE PRODUCT SPECIFICATION 035
400 867 645 0	5103178	PABS ECU E8C 12V 4S4M ESC ATC		
400 867 643 0	5105695	PABS ECU E8C 12V 4S4M ESC ATC		
400 867 642 0	5105694	PABS ECU E8C 12V 4S4M ESC ATC		
400 867 641 0	5105696	PABS ECU E8C 12V 4S4M ESC ATC		
400 867 640 0	5105693	PABS ECU E8C 12V 6S6M ESC ATC		
400 867 616 0	N/A	PABS ECU E8C 12V 4S4M XBR ESC ATC		
400 867 615 0	N/A	PABS ECU E8C 12V 4S4M XBR ESC ATC		
400 867 613 0	5093816	PABS ECU E8C 12V 4S4M XBR ESC ATC		
400 867 612 0	5093815	PABS ECU E8C 12V 4S4M XBR ESC ATC		
400 867 611 0	5093814	PABS ECU E8C 12V 4S4M XBR ESC ATC		
400 867 610 0	5093813	PABS ECU E8C 12V 6S6M XBR ESC ATC		

General Specification: JED-334-1 , Size ISO 14405 LP
Further Technical Data:
Doc. Code: Sheet: To

General Tolerances JED-261

Class 1)	Range of Nominal Dimensions (± mm) ≤ 50	> 50 ≤ 180	> 180 ≤ 400	> 400	∡
Fine	0.5	1.0	1.5	2.0	±3°
Medium	1.0	2.0	3.0	4.0	
Coarse	2.0	3.5	5.0	6.5	

Tapped Holes acc.
1) Tolerance Class Applied Crossmarked

Copyright WABCO

Date	Signature
Drawn	
2020-03-26	Sutton
Checked	
2020-03-27	Gutierrez
Expert	

WABCO

TABLE DRAWING -
PABS ECU E8C 12V

Mass	Scale	Material No.	Date of first issue: -		
0.6 KG	1.0	400 867 614 0	Doc.Code 053	Language EN	Sheet 1/1
Size A 1	CAD System CREO				

ECN-No.	Revision		Techn. Resp.	Replacement for
504263	2	A	6300	

100mm

Tutti i diritti riservati sulla presente documentazione tecnica. Non è permesso consegnare a terzi o riprodurre questo documento, né utilizzare il contenuto o renderlo comunque noto a terzi senza esplicita autorizzazione della Società WABCO. Eventuali violazioni comportano il risarcimento dei danni. Tutti i diritti riservati sulla concessione di brevetto o modello.

Copyright of this document and giving it to others and the use or communication of the contents thereof, are forbidden without express authority. Offenders are liable to the payment of damages. All rights are reserved in the event of the grant of patent or registration of a utility model or design. This document is the subject of copyright.

Toute Communication ou reproduction de ce document, toute exploitation ou communication de son contenu sont interdites, sauf autorisation expresse. Le non-respect de ces dispositions expose à un versement de dommages et intérêts. Tous droits de propriété intellectuelle réservés, notamment en matière de brevets et de modèles.

Weitergabe sowie Vervielfältigung dieser Unterlage, Verwertung und Mitteilung ihres Inhalts nicht gestattet, soweit nicht ausdrücklich zugesichert. Zuwiderhandlungen verpflichten zum Schadensersatz. Alle Rechte für den Fall der Patent- oder Gebrauchsmustererteilung vorbehalten.