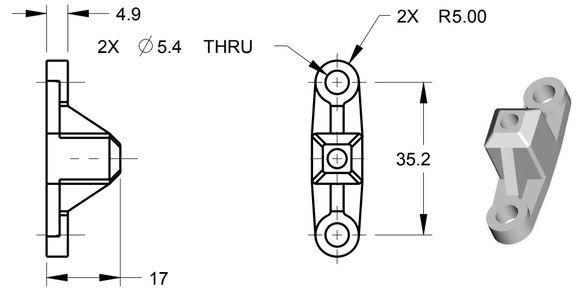

400 850 796 2 - RADAR ADJUSTER MOUNT - 3 REQD
FOR REFERENCE ONLY - NOT INCLUDED
SEE 400 850 796 2 DOC 007 FOR FURTHER INFORMATION

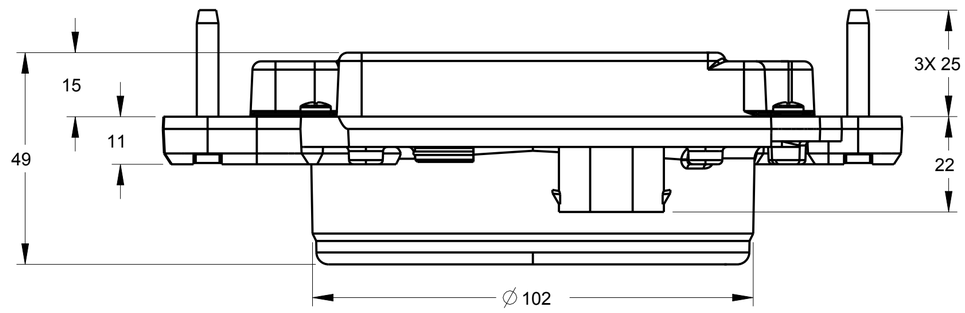

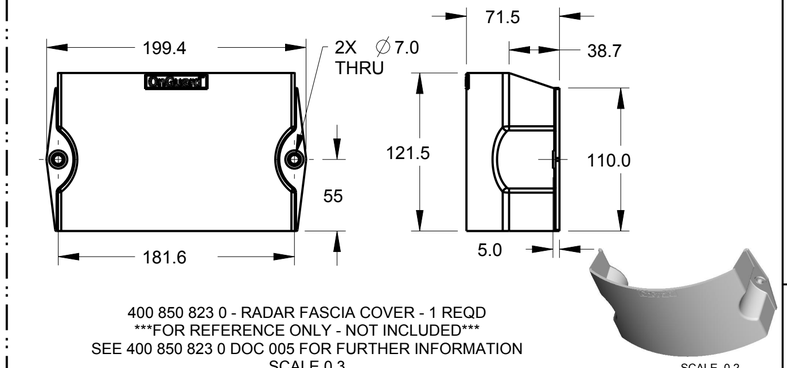

400 850 823 0 - RADAR FASCIA COVER - 1 REQD
FOR REFERENCE ONLY - NOT INCLUDED
SEE 400 850 823 0 DOC 005 FOR FURTHER INFORMATION
SCALE 0.3

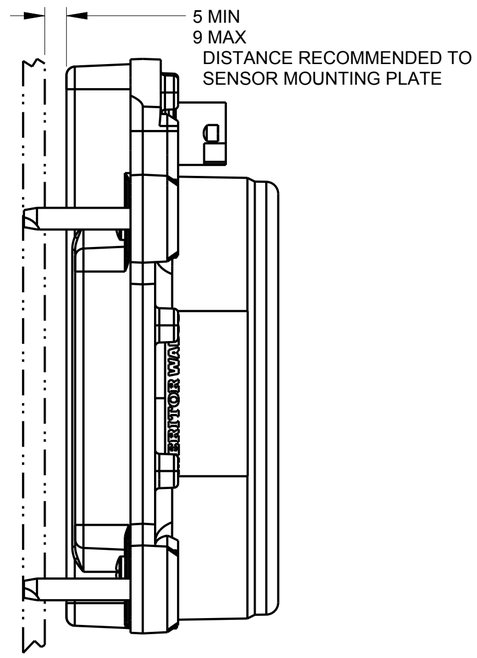

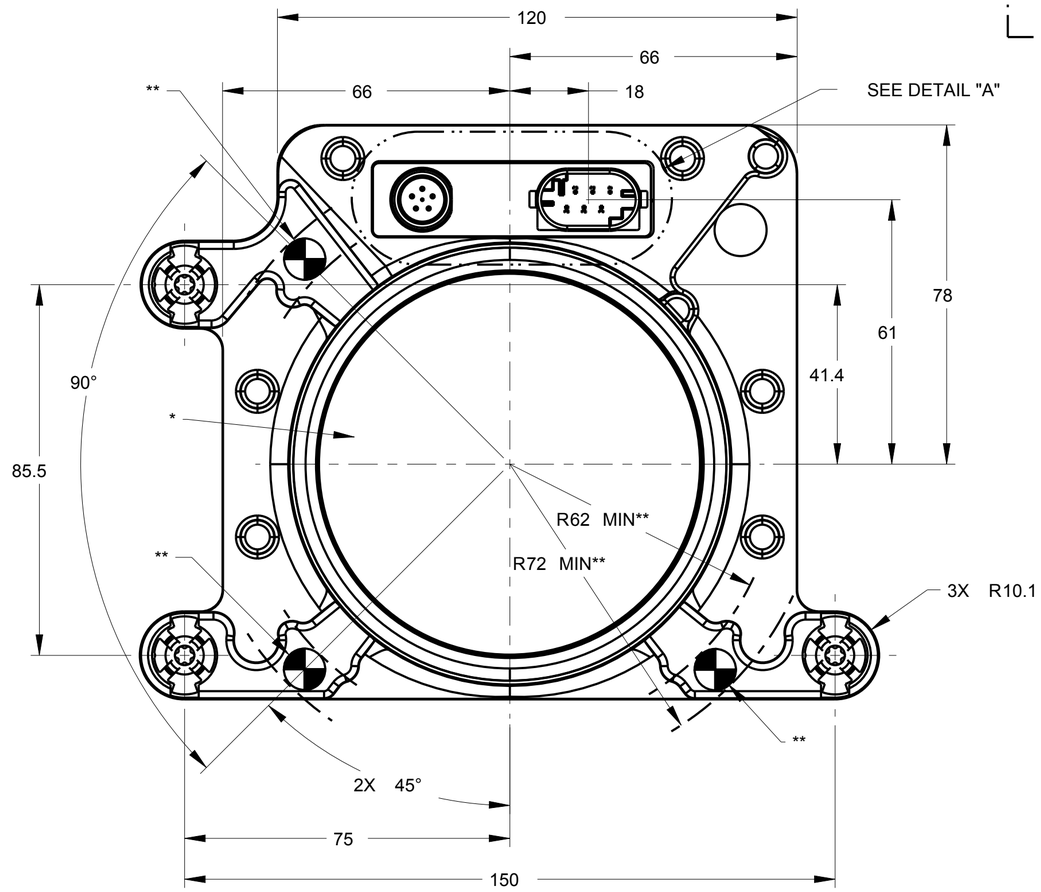

AMBIENT MEDIUM: AIR (CONTAINING WATER, DUST, AND OIL)

AMBIENT TEMPERATURE: -40° /+85° C

STORAGE TEMPERATURE: -40° /+105° C

VOLTAGE: 12V

PROTECTION CLASS: IP 6K9K / IP 67K

NO ADDITIONAL COATING ALLOWED FOR THE SENSOR

* IN THIS ZONE: NO ADHESIVE PERMITTED

** IN THIS ZONE:

** APPROX CENTER OF FACE

** DEEPEND NOT ALLOWED

** PERPENDICULAR TO RADAR AXIS (MIDDLE BEAM)

SCALE 0.4

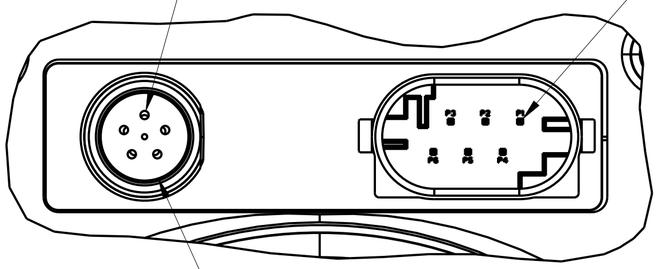

DETAIL "A"
SCALE 2.0

INSTALLATION POSITION
SCALE 0.25

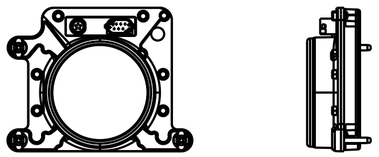

DRIVING DIRECTION

SOLID MODEL DRAWING METRIC IN MM		
DATE	SIGNATURE	
DRAWN: 10/13/10	CORCORAN	
CHECKED: 10/13/10	CORCORAN	
RELEASE: 10/15/10	113920	

MERITOR WABCO
Vehicle Control Systems

SENSOR, RADAR
DISTANCE CONTROL
CUMMINS ENG, MAN/AMT TRANS,
PACCAR CHASSIS, ACC/CMS

MASS	SCALE	PRODUCT IDENTIFICATION NO.	EDC CODE	DOC CODE	SHEET
KG	1.0	400 870 701 0	0713	005	1/1
SIZE	T.R.I.				
A 2	120				

DESIGN GROUP	SHAPE CODE	REPLACEMENT FOR
VDC		

DCN-NO. | REV. | DATE

100mm

EXPERT CODE

PRODUCT TYPE

COPYING OF THIS DOCUMENT AND GIVING IT TO OTHERS AND THE USE OR COMMUNICATION OF THE CONTENTS THEREOF, ARE FORBIDDEN WITHOUT EXPRESS AUTHORITY. OFFENDERS ARE LIABLE TO THE PAYMENT OF DAMAGES. ALL RIGHTS ARE RESERVED IN THE EVENT OF THE GRANT OF PATENT OR REGISTRATION OF A UTILITY MODEL OR DESIGN. THIS DOCUMENT IS THE SUBJECT OF COPYRIGHT.