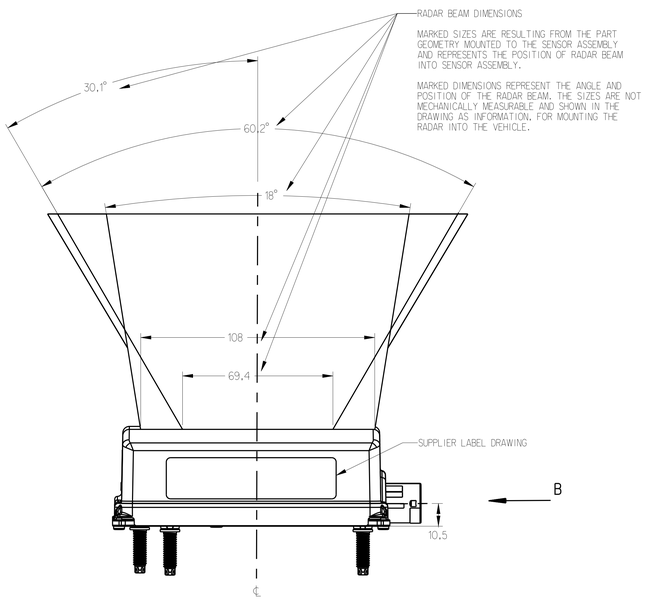

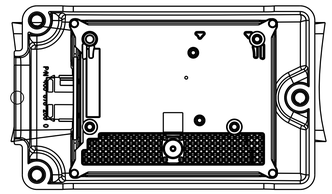

SCALE 0.750

REFER TO 400 878 200 0_006 FOR RADAR AND FASCIA POSITIONING.

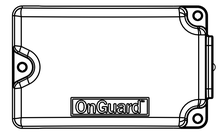

SCALE 0.500

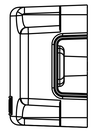

400 878 200 0- RADAR FASCIA COVER-REQD
FOR REFERENCE ONLY-NOT INCLUDED
SEE 400 878 200 0 DOC 005 FOR FURTHER INFORMATION

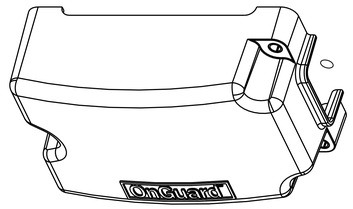

SCALE 0.750

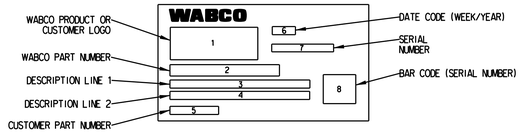

VIEW C
DO NOT SCALE
(B)

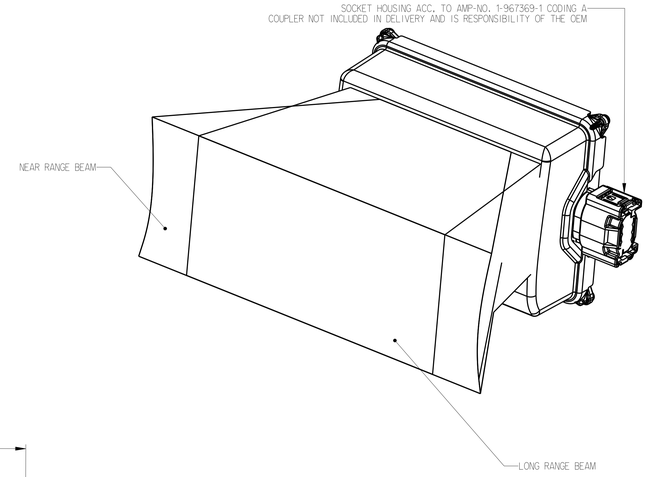

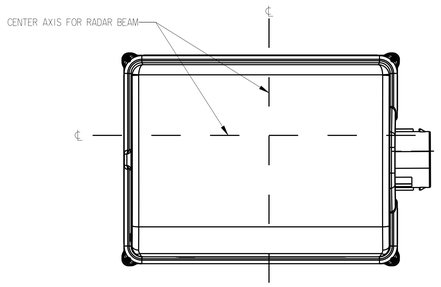

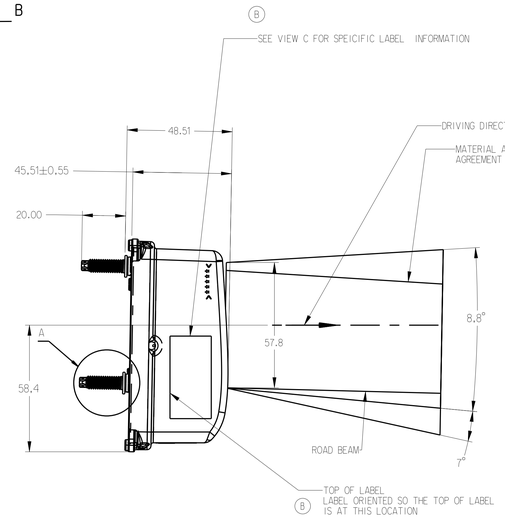

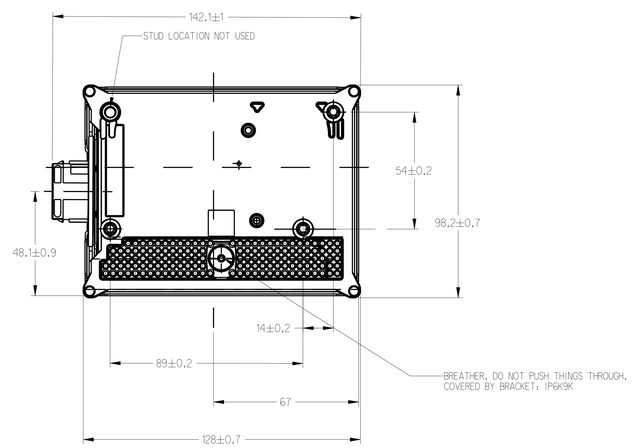

Auxiliary view B
Scale 2:1

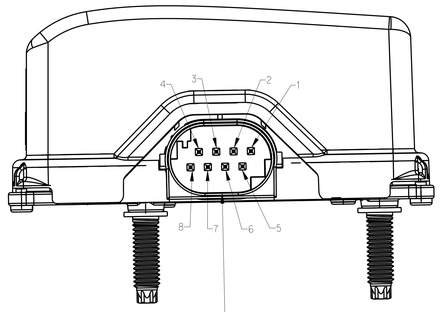

A (3x)
5:1

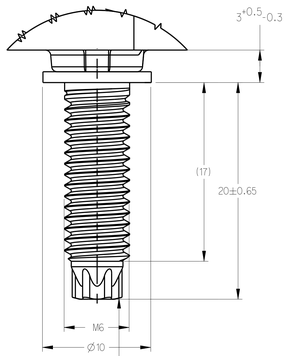

MATERIAL: ST 8.8, SURFACE ZnNi5m OR ZnNi8m
STOP SURFACE OF MOUNTING STUD SHALL BE IN FULL CONTACT WITH HOLE COLLAR

NUT, BRACKET AND MOUNTING STUD SHALL BE ASSEMBLED FREE OF CLEARANCE.

USE OF A LOCK NUT IS MANDATORY.

NR. NO.	BELEGUNG PINNING
1	UBATT
2	LINE WAKE
3	CAN 1 HIGH
4	CAN 0 LOW
5	LOAD
6	CAN 1 LOW
7	CAN 0 HIGH
8	GROUND

NOTES:

1. STORAGE TEMPERATURE: -50°C TO 105°C
   OPERATING TEMPERATURE: -40°C TO 85°C
   ONLY CAN COMUNICATION: 85°C TO 95°C
2. DO NOT PAINT RADAR SENSOR.

	PART NUMBER	CUSTOMER PART NUMBER	DESCRIPTION	ONGUARD SOFTWARE VERSION	ENGINE	CRUISE CONTROL MESSAGING	TRANSMISSION	ABS VERSION	NOTES
(B)	400 871 545 0	WAB400871545O	OnGuardPLUS RADAR SENSOR	ECR2 ACTIVE	CUMMINS	CCVS2/CCVS3	ALLISON	mBSP ON CHASSIS CAN THROUGH CENTRAL GATEWAY	SEE PRODUCT SPECIFICATION 035 FOR ALL OTHER TECHNICAL SPECIFICATIONS
	400 871 544 0	WAB400871544O					AUTOMATED MANUAL		
	400 871 543 0	WAB400871543O					MANUAL		
	400 871 542 0	WAB400871542O		ECR1 ACTIVE			AUTOMATED MANUAL		
	400 871 541 0	WAB400871541O					MANUAL		

General Specification: JED-334-1, Size ISO 14405 LP
Further Technical Data:
Doc. Code: Sheet: To:
General Tolerances JED-261

		Range of Nominal Dimensions (± as mm)				
Class	TI	≤ 50	> 50 ≤ 180	> 180 ≤ 400	> 400	∢
Fine		0.5	1.0	1.5	2.0	±3°
Medium	X	1.0	2.0	3.0	4.0	
Coarse		2.0	3.5	5.0	6.5	

Tapped Holes acc.
TI Tolerance Class Applied Crosshatched

Copyright WABCO®

	Date	Signature
Drawn	03/10/16	SUTTON
Checked	03/11/16	MCGREGOR
Expert	MURPHY	

Mass: 0.5&3 KG
Scale: 1:0
Size: A 0
CAD System: CREO

WABCO (B)

OnGuardPLUS Radar Sensor
DTNA - Freightliner
P4 CASCADIA 500 K

Material No.: 400 871 540 0
Doc.Code: 053
Language: EN
Sheet: 1/1
EDB-No.: 1791131
Revision: 5 B
Tachn. Resp.: 6832_MW
Replacement for: -

THIRD ANGLE PROJECTION

100mm

Tale Dimensión la reproducción de la información, toda expedición a comunicación de los contenidos sin consentimiento, salvo autorización expresa. Tal incumplimiento puede ser ilícito constituir un delito sujeto al castigo de indemnizar los daños y perjuicios y más contenido de dicho delito.
Reservados asimismo, los derechos derivados de la concesión de patente o de registro de un modelo de utilidad o de un diseño estético o de un modelo de utilidad.
Copyright © The document and parts thereof is, where and to the extent as permissible in the country hereof, are hereby reserved. Copyright © The document and parts thereof is, where and to the extent as permissible in the country hereof, are hereby reserved. Copyright © The document and parts thereof is, where and to the extent as permissible in the country hereof, are hereby reserved.
Tale Dimensión la reproducción de la información, toda expedición a comunicación de los contenidos sin consentimiento, salvo autorización expresa. Tal incumplimiento puede ser ilícito constituir un delito sujeto al castigo de indemnizar los daños y perjuicios y más contenido de dicho delito.
Reservados asimismo, los derechos derivados de la concesión de patente o de registro de un modelo de utilidad o de un diseño estético o de un modelo de utilidad.
Copyright © The document and parts thereof is, where and to the extent as permissible in the country hereof, are hereby reserved. Copyright © The document and parts thereof is, where and to the extent as permissible in the country hereof, are hereby reserved. Copyright © The document and parts thereof is, where and to the extent as permissible in the country hereof, are hereby reserved.