<1> SAFETY CHARACTERISTICS	0
<2> SIGNIFICANT CHARACTERISTICS	0
<CI> CUSTOMER INTERFACE	0

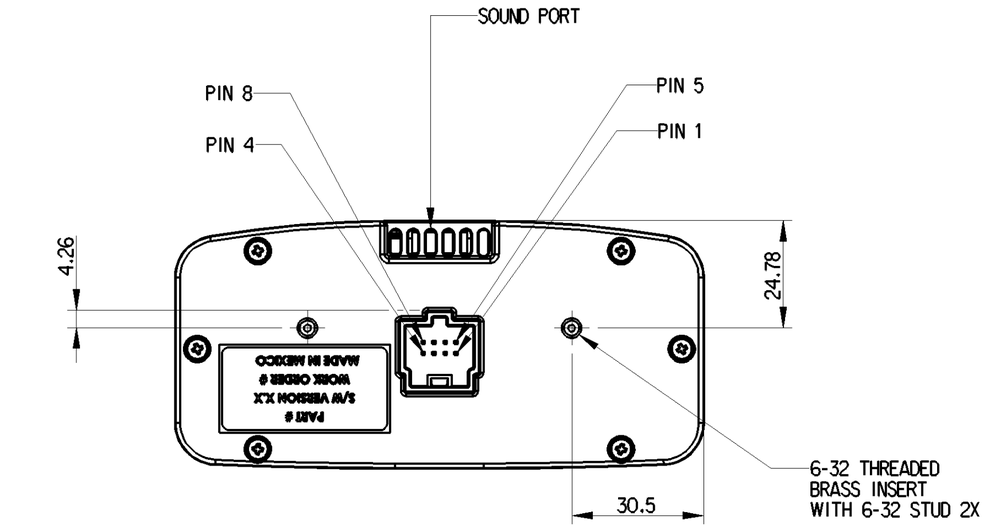

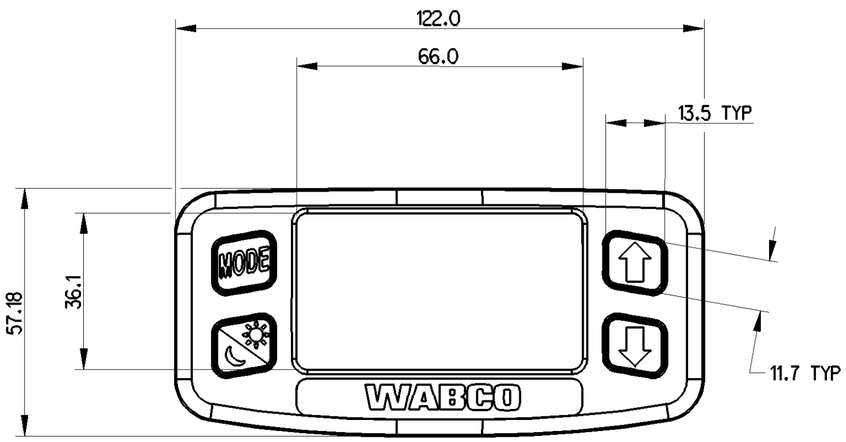

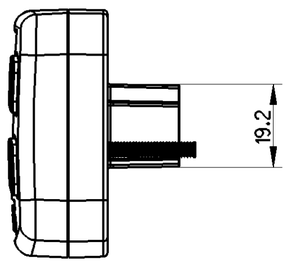

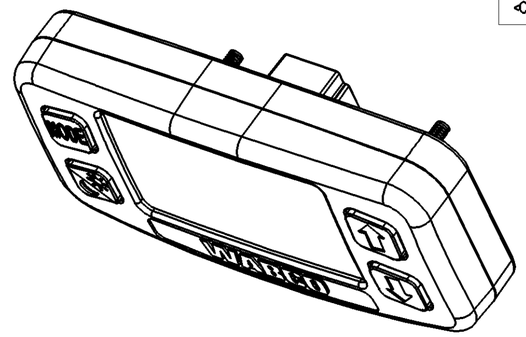

CONNECTOR	
MATING HARNESS CONNECTOR MOLEX 30700-1081	
MATING HARNESS TERMINALS MOLEX 33230-0003 OR MOLEX 33230-0004 OR TYCO 1393366-1	
PIN	FUNCTION
1	N/C
2	N/C
3	N/C
4	IGNITION
5	GROUND
6	J1939 CAN_L
7	J1939 CAN_H
8	N/C

NOTES:

1. OPERATING TEMPERATURE: -20°C TO +60°C
2. OPERATING VOLTAGE: +9VDC TO +36VDC
3. REFER TO PRODUCT SPECIFICATION FOR FURTHER DETAILS.
4. RECOMMENDED FASTENER TIGHTNING TORQUE 6-8 IN-LBS
5. SOFTWARE VERSION SOF00089830

THIRD ANGLE PROJECTION

TOLERANCES	
UNLESS OTHERWISE SPECIFIED THESE TOLERANCES APPLY	
<10MM ±	0.15
10-30MM ±	0.30
>30MM ±	0.50
ANGLES ±	1°

General Specification: ISO 8015, JED-334-1, Size ISO 14405 LP
Further Technical Data:
Doc. Code: Sheet: To

General Tolerances JED-261

Class 1)	Range of nominal dimensions in mm ≤ 50	> 50 ≤ 180	> 180 ≤ 400	> 400	∡
Fine	±0.5	±1	±1.5	±2	±3°
Medium	±1	±2	±3	±4	
Coarse	±2	±3.5	±5	±6.5	

Tapped Holes acc. -
1) Tolerance Class Applied Crossmarked

Copyright ZF®

Date	Signature
Drawn 2023-04-11	Kanakaraj
Checked 2023-04-11	Murphy

Dimensions in mm

ONGUARD DISPLAY
OnGuard™

Mass	Scale	Material No.	Date of first issue: 2023-04-11
0.113 kg	1:1	400 871 851 0	Doc.Code 005 / Language EN / Sheet 1/1
Size A 2	CAD System CREO	ECN-No. - / Revision - - / Techn. Resp. 6832_US	Replacement for -

100mm

Tout Communication ou reproduction de ce document, toute exploitation ou communication de son contenu sont interdites, sauf autorisation expresse. Tout manquement à cette règle constitue un abus évident et expose son auteur au versement de dommages et intérêts. Tous droits de propriété industrielle réservés, notamment en matière de brevets et de modèles.

Weitergabe sowie Vervielfältigung dieser Unterlage, Verwertung und Mitteilung ihres Inhalts nicht gestattet, soweit nicht ausdrücklich zugestanden. Zuwiderhandlungen stellen einen offensichtlichen Missbrauch dar und verpflichten zu Schadensersatz. Alle Rechte für den Fall der Patenterteilung oder Gebrauchsmuster-Eintragung vorbehalten.

Non è permesso consegnare a terzi o riprodurre questo documento, né utilizzarne il contenuto o renderlo comunque noto a terzi senza autorizzazione esplicita. Ogni infrazione costituirà un evidente abuso e comporterà il risarcimento dei danni subiti. E' fatta riserva di tutti i diritti derivanti da brevetti o modelli.

Copying of this document and giving it to others and the use or communication of the contents thereof, are forbidden without express authority. Contravention of this restriction will constitute an evident abuse and result in a liability to the payment of damages. All rights are reserved in the event of the grant of patent or registration of a utility model or design. This document is the subject of copyright.