<1>	SAFETY CHARACTERISTICS	0
<2>	SIGNIFICANT CHARACTERISTICS	0

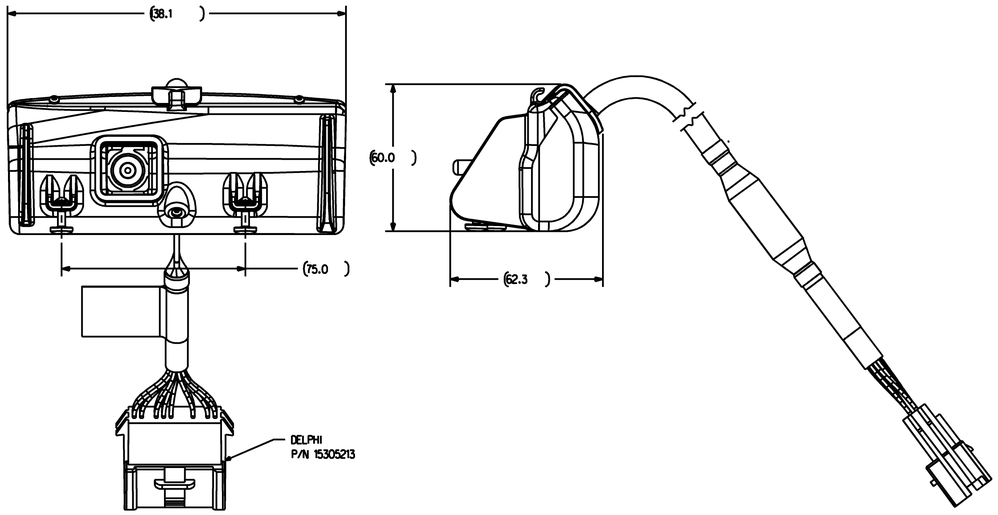

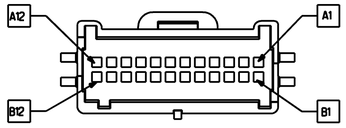

DELPHI P/N 15305213
SCALE 2:1

DELPHI 15305213			
ROW A		ROW B	
PIN #	SIGNAL NAME	PIN #	SIGNAL NAME
A1	L SPEAKER (+)OUT	B1	L SPEAKER (-)OUT
A2	R SPEAKER (+)OUT	B2	R SPEAKER (-)OUT
A3	UNUSED	B3	UNUSED
A4	L TURN SIGNAL IN	B4	R TURN SIGNAL IN
A5	UNUSED	B5	UNUSED
A6	UNUSED	B6	UNUSED
A7	LANE SEARCHING INDICATOR OUT	B7	ENABLED INDICATOR OUT
A8	UNUSED	B8	ENABLE/DISABLE SWITCH IN
A9	IGNITION IN	B9	GROUND
A10	UNUSED	B10	UNUSED
A11	UNUSED	B11	UNUSED
A12	J1939_HI	B12	J1939_LO

Ⓓ NOTES:

1. PARTS SHALL BE FREE OF MOLD RELEASE, DIRT, GREASE, OIL, SALT RESIDUE, DETERGENTS AND OTHER PROCESSING CHEMICALS, FLASH, SINK, VOIDS, NICKS, SCRATCHES, TOOL MARKS, METAL FLAKES >0.13MM AND OTHER GENERAL CONTAMINANTS AND IMPERFECTIONS THAT MAY BE DETRIMENTAL TO PART FIT OR FUNCTION. (PERMISSIBLE: LESS THAN SIX METAL FLAKES <0.13MM ON INTERIOR SURFACES)

2. MODULE MATES WITH BRACKET ASSEMBLY (SEE TABLE 1). SEE BRACKET DRAWING FOR DETAILS.

3. WIRE HARNESS CONNECTOR MATE DELPHI 12110088 OR 15428074.

4. VOLTAGE: 12V ±3V.

5. REMOVE LENS PROTECTOR BEFORE INSTALLING.

6. CUSTOMER LABEL TO CONTAIN THE FOLLOWING INFORMATION:

   WABCO LOGO
   WABCO PART NUMBER
   PACCAR LOGO
   PACCAR SUPPLIER CODE
   DATE CODE (WK/YR)
   PART DESCRIPTION: ONLANE (SEE TABLE 2)
   TAKATA BARCODE INFORMATION READABLE TEXT (NO BARCODE)
   CUSTOMER PART NUMBER (SEE TABLE 4)
   CUSTOMER DRAWING REVISION (SEE TABLE 5)

7. INSTALLATION PARAMETERS ARE LISTED IN TABLE 3. CAMERA HEIGHT AND OFFSET ARE TO THE CENTER OF THE CAMERA LENS FROM A LEVEL FLOOR AND THE CENTER OF THE WINDOW RESPECTIVELY.

8. FOR FURTHER TECHNICAL DATA SEE PART NUMBER PRODUCT SPECIFICATION.

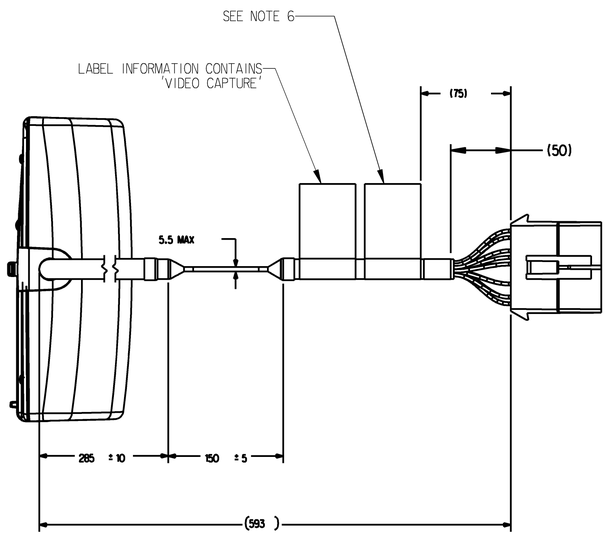

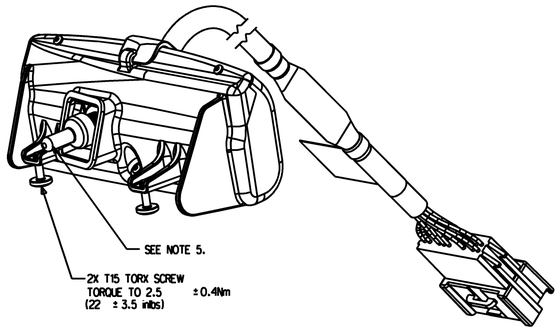

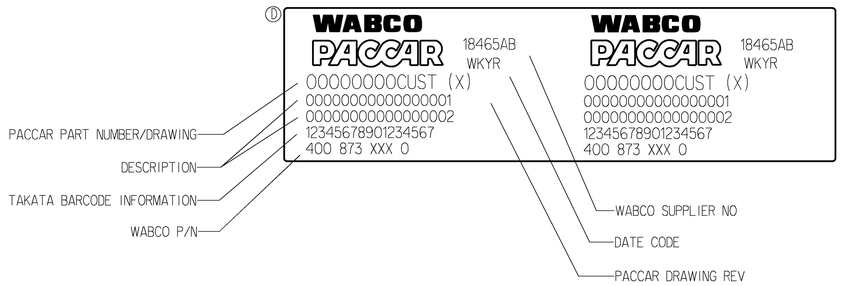

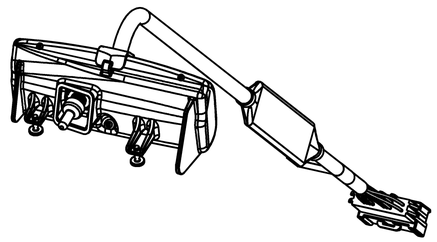

THIRD ANGLE PROJECTION

400 873 006 0	400 873 101 0	BASE	KW T680 / PB579-NGP	250 CM	256 CM	15 CM	Q21-1099-300	A
400 873 012 0	400 873 101 0	BASE + VIDEO	KW T680 / PB579-NGP	250 CM	256 CM	15 CM	Q21-6057-300	C
PART NUMBER	MATING BRACKET	DESCRIPTION	VEHICLE MODEL	VEHICLE WIDTH	CAMERA HEIGHT	CAMERA OFFSET	CUSTOMER P/N	CUSTOMER P/N REV
				INSTALLATION				
	TABLE 1	TABLE 2		TABLE 3			TABLE 4	TABLE 5

General Specification: JED-334-1 , Size ISO 14405 LP					
Further Technical Data:					
Doc. Code:		Sheet:	To		
General Tolerances JED-261					
	Range of Nominal Dimensions (± mm)				
Class 1)	≤ 50	> 50 ≤ 180	> 180 ≤ 400	> 400	∢
Fine	0.5	1.0	1.5	2.0	
Medium	1.0	2.0	3.0	4.0	±3°
Coarse	2.0	3.5	5.0	6.5	
Tapped Holes acc.					
1) Tolerance Class Applied Crossmarked					

Copyright WABCO®

Date	Signature
Drawn	
2019-05-15	Srinivasaperumal
Checked	
2019-05-15	McNally
Expert	
-	

WABCO Ⓓ

MODULE - ONLANE, PACCAR

Mass	Scale	Material No.	Date of first issue: -	
- KG	1:1	400 873 017 0	Doc.Code	Language	Sheet
			053	EN	1/1
Size	CAD System				
A 1	CREO				

EON-No.	Revision	Techn. Resp.	Replacement for
500832	3x D	6834_MW	-

100mm

Toute Communication ou reproduction de ce document, toute exploitation ou communication de son contenu sont interdites, sauf autorisation expresse. Tout manquement à cette interdiction rend son auteur responsable du paiement de dommages et expose son auteur à des sanctions de droit civil et pénal. Tous droits de propriété industrielle réservés, notamment en matière de brevets et de modèles.

Weitergabe sowie Vervielfältigung dieser Unterlage, Verwertung und Mitteilung ihres Inhalts nicht gestattet, soweit nicht ausdrücklich zugesichert. Zuwiderhandlungen verpflichten zu Schadenersatz. Alle Rechte für den Fall der Patenterteilung oder Gebrauchsmustereintragung vorbehalten.

Non è permesso consegnare o fare o riprodurre questo documento, né utilizzare il contenuto o renderlo comunque noto a terzi senza autorizzazione. Il trasgressore è tenuto al risarcimento dei danni. Ogni diritto di proprietà industriale è riservato, in particolare quello di brevetti o modelli.

Copying of this document and giving it to others and the use or communication of the contents thereof, are forbidden without express authority. Offenders are liable to the payment of damages. All rights are reserved in the event of the grant of patent or registration of a utility model or design. This document is the subject of copyright.