| | |
|---|---|
| <1> SAFETY CHARACTERISTICS | 0 |
| <2> SIGNIFICANT CHARACTERISTICS | 0 |

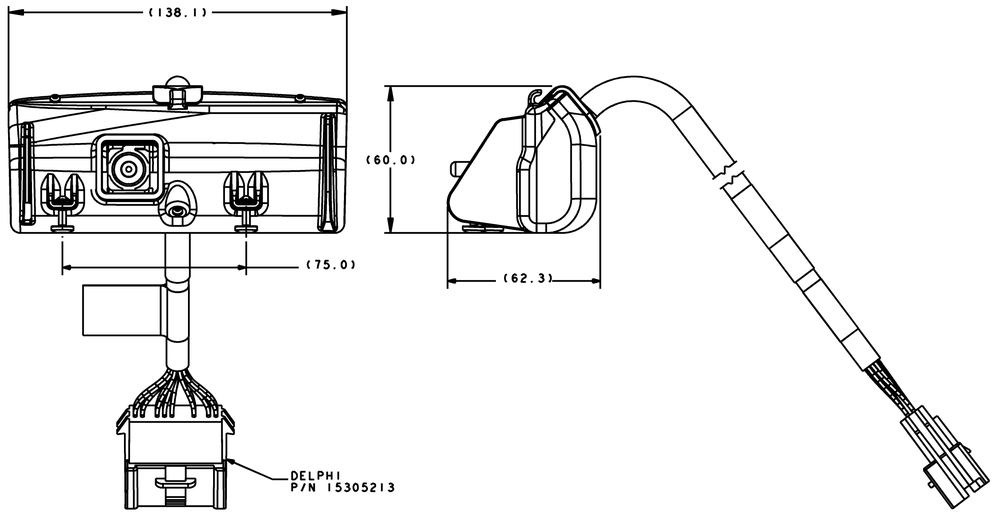


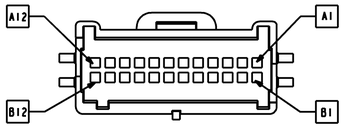


DELPHI P/N 15305213
SCALE 2:1

| DELPHI 15305213 | | | |
|---|---|---|---|
| ROW A | | ROW B | |
| PIN # | SIGNAL NAME | PIN # | SIGNAL NAME |
| A1 | L SPEAKER (+)OUT | B1 | L SPEAKER (-)OUT |
| A2 | R SPEAKER (+)OUT | B2 | R SPEAKER (-)OUT |
| A3 | NOT POPULATED | B3 | NOT POPULATED |
| A4 | L TURN SIGNAL IN | B4 | R TURN SIGNAL IN |
| A5 | NOT POPULATED | B5 | NOT POPULATED |
| A6 | NOT POPULATED | B6 | NOT POPULATED |
| A7 | LANE SEARCHING INDICATOR OUT | B7 | ENABLED INDICATOR OUT |
| A8 | UNUSED | B8 | ENABLE/DISABLE SWITCH IN |
| A9 | IGNITION IN | B9 | GROUND |
| A10 | NOT POPULATED | B10 | NOT POPULATED |
| A11 | UNUSED | B11 | UNUSED |
| A12 | J1939_HI | B12 | J1939_LO |

(B)

NOTES:

1. PARTS SHALL BE FREE OF MOLD RELEASE, DIRT, GREASE, OIL, SALT RESIDUE, DETERGENTS AND OTHER PROCESSING CHEMICALS, FLASH, SINK, VOIDS, NICKS, SCRATCHES, TOOL MARKS, METAL FLAKES >0.13MM AND OTHER GENERAL CONTAMINANTS AND IMPERFECTIONS THAT MAY BE DETRIMENTAL TO PART FIT OR FUNCTION. (PERMISSIBLE: LESS THAN SIX METAL FLAKES <0.13MM ON INTERIOR SURFACES)

2. MODULE MATES WITH BRACKET ASSEMBLY (SEE TABLE 1). SEE BRACKET DRAWING FOR DETAILS.

3. WIRE HARNESS CONNECTOR MATE DELPHI 12110088 OR 15428074.

4. VOLTAGE: 12V ±3V.

5. REMOVE LENS PROTECTOR BEFORE INSTALLING.

6. CUSTOMER LABEL TO CONTAIN THE FOLLOWING INFORMATION:

   WABCO LOGO
   WABCO PART NUMBER
   DATE CODE (WK/YR)
   PART DESCRIPTION: ONLANE (SEE TABLE 2)
   TAKATA BARCODE INFORMATION READABLE TEXT (NO BARCODE)

7. INSTALLATION PARAMETERS ARE LISTED IN TABLE 3. CAMERA HEIGHT AND OFFSET ARE TO THE CENTER OF THE CAMERA LENS FROM A LEVEL FLOOR AND THE CENTER OF THE WINDOW RESPECTIVELY.

8. FOR FURTHER TECHNICAL DATA SEE PART NUMBER PRODUCT SPECIFICATION.

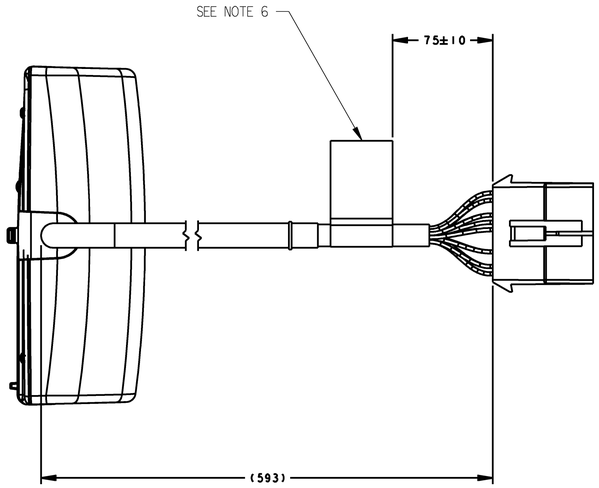


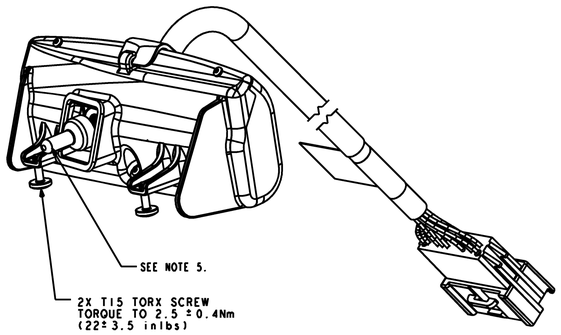


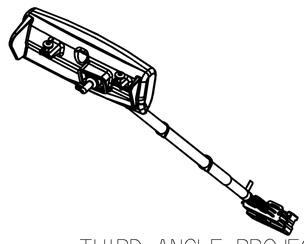

THIRD ANGLE PROJECTION

| PART NUMBER | MATING BRACKET | DESCRIPTION | VEHICLE WIDTH | CAMERA HEIGHT | CAMERA OFFSET |
|---|---|---|---|---|---|
| 400 873 020 0 | 400 873 101 0 | BASE + VIDEO | 249 CM | 260 CM | 15 CM |
| 400 873 019 0 | 400 873 101 0 | BASE | 249 CM | 260 CM | 15 CM |
| | TABLE 1 | TABLE 2 | INSTALLATION TABLE 3 | | |

| Class 1) | Range of Nominal Dimensions ( ± mm) ≤ 50 | > 50 ≤ 180 | > 180 ≤ 400 | > 400 | ∢ |
|---|---|---|---|---|---|
| Fine | 0.5 | 1.0 | 1.5 | 2.0 | ±3° |
| Medium | 1.0 | 2.0 | 3.0 | 4.0 | |
| Coarse | 2.0 | 3.5 | 5.0 | 6.5 | |
| Tapped Holes acc. | | | | | |

1) Tolerance Class Applied Crossmarked

General Specification: JED-334-1 . Size ISO 14405 LP
Further Technical Data:
Doc. Code: Sheet: To
General Tolerances JED-261

Copyright WABCO®

| Date | Signature |
|---|---|
| Drawn 2019-04-26 | Srinivasaperumal |
| Checked 2019-04-26 | McNally |
| Expert - | |

**WABCO** (B)

MODULE ASSY
BASIC (LDW) WESTERN STAR
PHANTOM

| Mass | Scale | Material No. | Date of first issue: | | |
|---|---|---|---|---|---|
| - KG | 1:1 | 400 873 018 0 | Doc.Code 053 | Language EN | Sheet 1/1 |
| Size A 1 | CAD System CREO | | | | |

| ECN-No. | Revision | Techn. Resp. | Replacement for |
|---|---|---|---|
| 500832 | 2x B | 6834_MW | - |

100mm

Toute Communication ou reproduction de ce document, toute exploitation ou communication de son contenu sont interdites, sauf autorisation écrite. Tous droits de propriété intellectuelle réservés, notamment en matière de brevets et de modèles.

Weitergabe sowie Vervielfältigung dieser Unterlage, Verwertung und Mitteilung ihres Inhalts nicht gestattet, soweit nicht ausdrücklich zugestanden. Zuwiderhandlungen verpflichten zu Schadensersatz. Alle Rechte für den Fall der Patenterteilung oder Gebrauchsmustereintragung vorbehalten.

Non è permesso consegnare a terzi o riprodurre questo documento, né utilizzare il contenuto o renderlo comunque noto a terzi senza autorizzazione scritta. Ogni violazione obbliga al risarcimento dei danni. Tutti i diritti di proprietà industriale sono riservati, in particolare quelli di brevetto o di registrazione di modello.

Copyright of this document and giving it to others and the use or communication of the contents thereof, are forbidden without express authority. Offenders are liable to the payment of damages. All rights are reserved in the event of the grant of patent or registration of a utility model or design. This document is the subject of copyright.