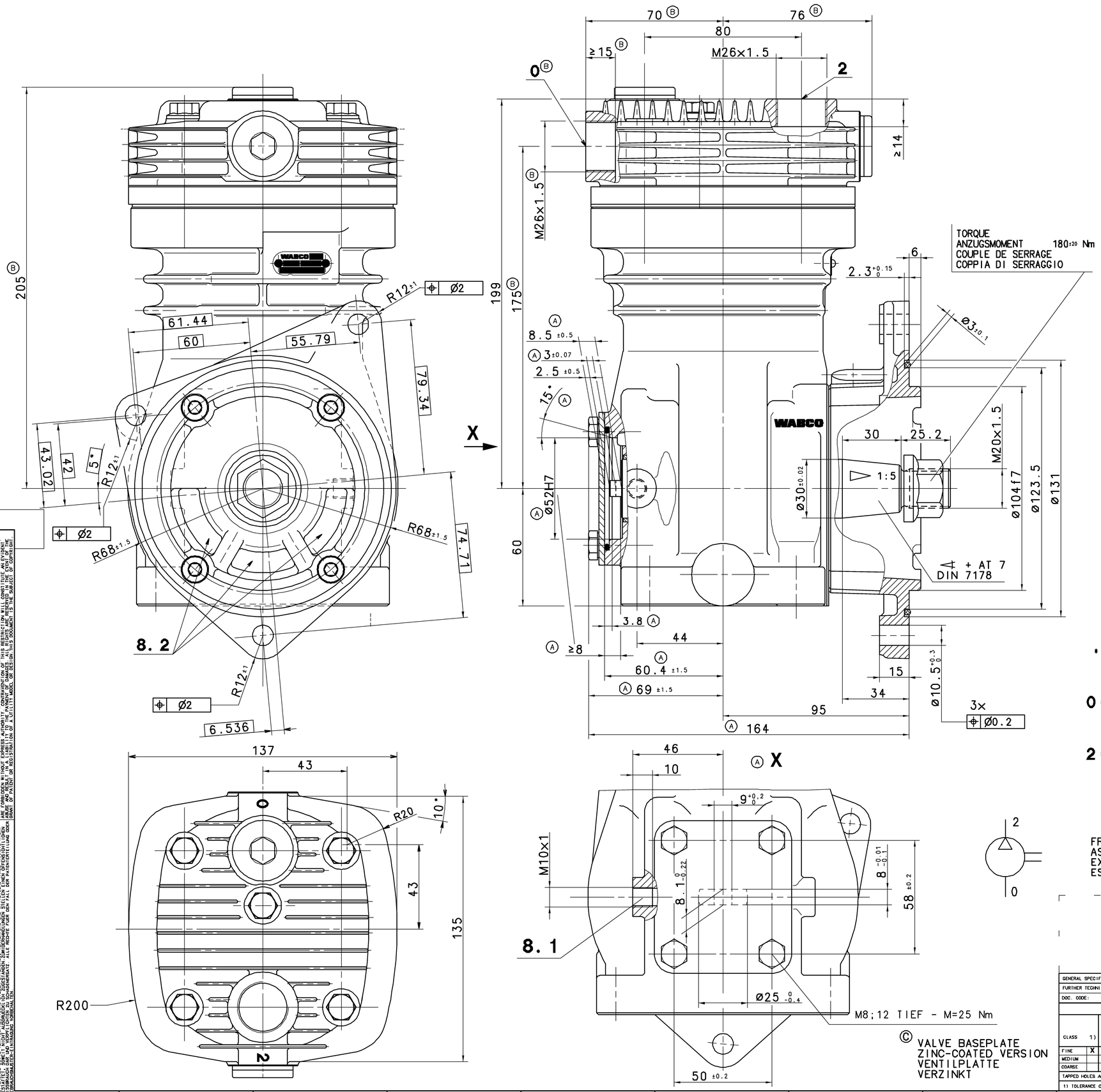

© VALVE BASEPLATE
ZINC-COATED VERSION
VENTILPLATTE
VERZINKT

TECHNICAL DATA
TECHNISCHE DATEN
CARACTERISTIQUES TECHNIQUES
CARATTERISTICHE TECNICHE

BORE: BOHRUNG: ALESAGE: ALESAGGIO:	ø90 mm
STROKE: HUB: COURSE: CORSA:	36 mm
SWEPT VOLUME: HUBRAUM: CYLINDREE: CYLINDRATA:	229 cm^3
MAX.WORKING SPEED: MAX.BETRIEBSDREHZAHL: VITESSE D'UTILISATION MAXI.: VELOCITA DI ESERCIZIO MAX.:	n_{max}= 3000 min^{-1}
OVERSPEED(TEMPORARY MAX. 4 SEC.): UEBERDREHZAHL(KURZZEITIG MAX. 4 SEC.): SURVITESSE(DE'COURTE DUREE MAXI. 4 SEC.): SOVRAVELOCITA(BREVE TEMPO SOLO MAX.4 SEC.):	n_{ue}= 1.3 x n_{max}.
MAX.WORKING PRESSURE: MAX.BETRIEBSDRUCK: PRESSION D'UTILISATION MAXI.: PRESSIONE DI ESERCIZIO MAX.:	p_e=10 bar

LUBRICATION: LUBRICATION SUPPLIED FROM ENGINE
SCHMIERART: UMLAUFSCHMIERUNG MIT DRUCKOELANSCHLUSS (UD)
GRAISSAGE: GRAISSAGE PAR CIRCULATION ALIMENTATION PAR LE MOTEUR
LUBRIFICAZIONE: LUBRIFICAZIONE A CIRCOLAZIONE ALIMENTAZIONE DAL MOTORE

PERFORMANCE DIAGRAM: LEISTUNGSDIAGRAMM: DIAGRAMME DE PUISSANCE: DIAGRAMMA DI POTENZA:	411 142 000 0 (997)

REQUIRED COOLING AIR SPEED: ERFORDERLICHE KUEHLLUFTGESCHWINDIGKEIT: VITESSE DE VENTILATION NECESSAIRE: VELOCITA DI VENTILAZIONE NECESSARIA:	p_e ≤ 8 bar	4m/s
	p_e ≥ 8 bar	6m/s

MAX. PERMISSIBLE TILT DURING CONTINUOUS WORKING:
MAX. ZULAESSIGE NEIGUNG IM DAUERBETRIEB:
INCLINAISON MAX. ADMISE EN.SERVICE CONTINU:
MASSIMA INCLINAZIONE AMMESSA IN CASO DI SERVIZIO CONTINUO:

END PLAY OF CRANKSHAFT: 0.08....0.38 mm
AXIALSPIEL DER KURBELWELLE:
JEU AXIAL DU VILEBREQUIN:
GIOCO ASSIALE DELL'ALBERO A GOMITO:

*) MAX. PERMISSIBLE PRESSURE TEMPERATURE IN SERVICE 220°C
MAX. ZULAESSIGE DRUCKSTUTZENTEMPERATUR WAEHREND DES FAHRBETRIEBES
TEMPERATURE MAX. ADMISSIBLE EN SERVICE
TEMPERATURA MAX. AMMISSIBLE IN SERVIZIO

0 = INLET PORT
SAUGANSCHLUSS M ≤ 100 Nm
ASPIRATION
ASPIRAZIONE

2 = DISCHARGE PORT
DRUCKANSCHLUSS M ≤ 100 Nm
REFOULEMENT
COMPRESSIONE

8.1 = OIL SUPPLY
DRUCKOELANSCHLUSS M≤ 15 Nm
ORIFICE D'ARRIVEE D'HUILE
ORIFIZIO D ARRIVO OLIO

8.2 = OIL DRAIN
OELRUECKLAUF
RETOUR D'HUILE
RITORNO OLIO

FREE FROM ASBESTOS
ASBESTFREI
EXEMPT D'AMIANTE
ESENTE D'AMIANTO

GENERAL SPECIFICATION:	JED-334		
FURTHER TECHNICAL DATA:			
DOC. CODE:	SHEET:	TO	
GENERAL TOLERANCES			
CLASS 1)	RANGE OF NOMINAL DIMENSIONS (± mm) ≤50	>50 ≤180	>180 ≤400	>400
FINE X	0,5	1,0	1,5	2,0
MEDIUM	1,0	2,0	3,0	4,0
COARSE	2,0	3,5	5,0	6,5
TAPPED HOLES ACC. ISO 4039 / JED-152				± 3°
1) TOLERANCE CLASS APPLIED CROSSMARKED				

DCN-NO.	REV.	DATE
084568	1xC	04-06-23
069819	7xB	99-03-18
062993	10xA	98-04-08

CADAM-DRAWING COPYRIGHT

DATE	SIGNATURE
DRAWN: 97-09-20	GROSSKOPF
CHECKED: 97-09-20	KRAMER
STANDARDIZATION:	

WABCO

SINGLE CYLINDER COMPRESSOR
EINZYLINDER KOMPRESSOR
COMPRESSEUR MONOCYLINDRIQUE
COMPRESSORE MONOCILINDRICO

MASS	SCALE	PRODUCT IDENTIFICATION NO.	DOC. CODE	SHEET
9.8 KG	1:1	411 146 003 0	605	1/1
SIZE	T.R.I.			
A 1	510			

SHAPE CODE

REPLACEMENT FOR
884 010 562 0 OF 96-10-08

100mm

EXPERT CODE 7 1 3

PRODUCT TYPE 0 0 X

1000/015/3/04.93

833/833

TOUTE COMMUNICATION OU REPRODUCTION DE CE DOCUMENT, TOUTE EXPLOITATION OU COMMUNICATION DE SON CONTENU O RENONCE EN FAVEUR DE TIERS SERA PUNIE. TOUS DROITS DE PROPRIETE INTELLECTUELLE ACCORDES PAR LA LOI SUR LA PROPRIETE INTELLECTUELLE DANS LE CAS D'ENREGISTREMENT, DE BREVET OU DE MODELE DE GARANTIE. SUR LA NON-CONTRAVENTION DES DROITS DE TIERS.

NON È PERMESSO CONSEGNARE A TERZI O RIPRODURRE QUESTO DOCUMENTO, NE UTILIZZARNE IL CONTENUTO O RENDERLO COMUNQUE NOTO A TERZI. SONO RISERVATI PER LA TUTELA DEI DIRITTI DI PROPRIETÀ INTELLETTUALE I DIRITTI DERIVANTI DA REGISTRAZIONE, BREVETTO O MODELLO DI GARANZIA. SI RISERVA IL DIRITTO DI MODIFICA.

DOCUMENT OF THIS DOCUMENT AND GIVING IT TO OTHERS AND THE USE OF COMMUNICATION OF THE CONTENTS THEREOF ARE PROHIBITED. WE RESERVE ALL RIGHTS ARISING FROM THE RIGHTS OF PROPERTY INTELLECTUAL AND RIGHTS ARISING FROM THE GRANT OF PATENT OR REGISTRATION OF A UTILITY MODEL OR DESIGN. THIS DOCUMENT IS THE SUBJECT OF COPYRIGHT.