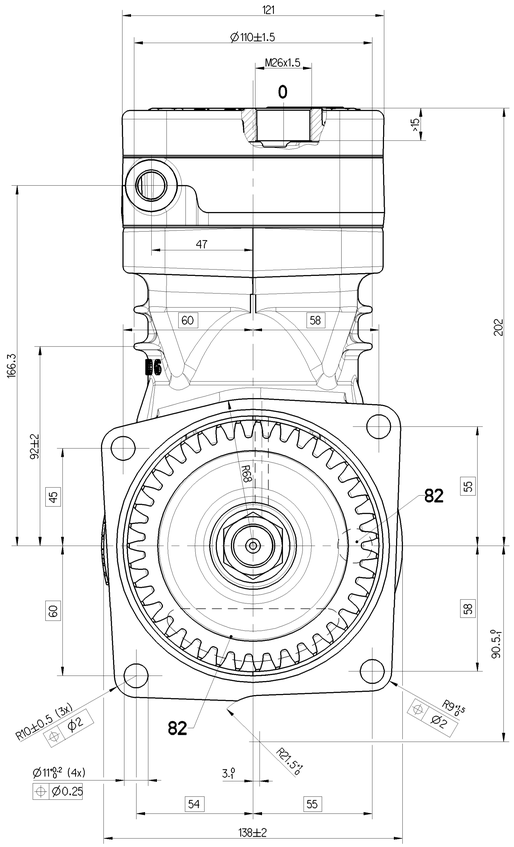

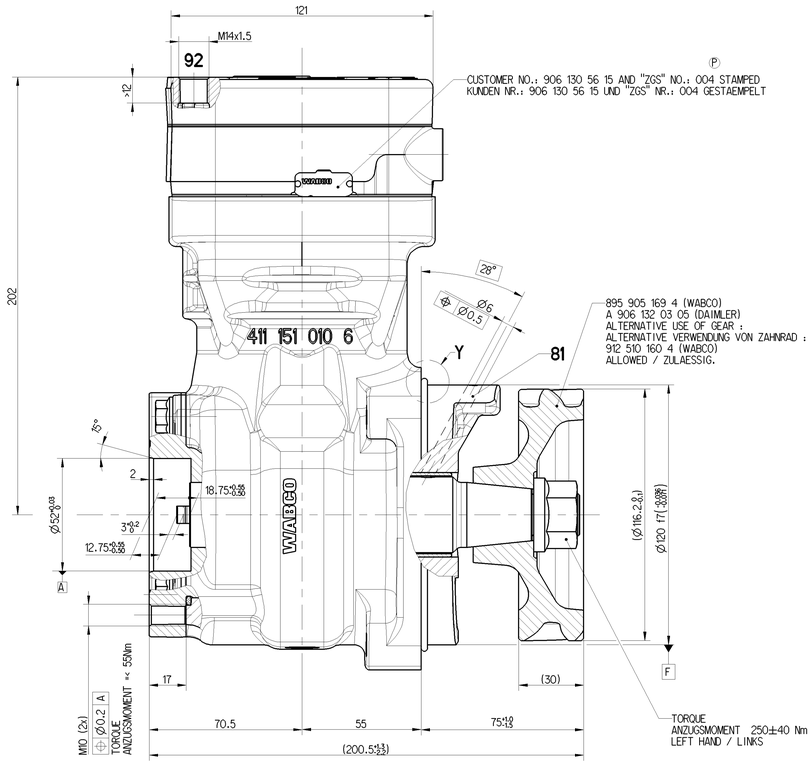

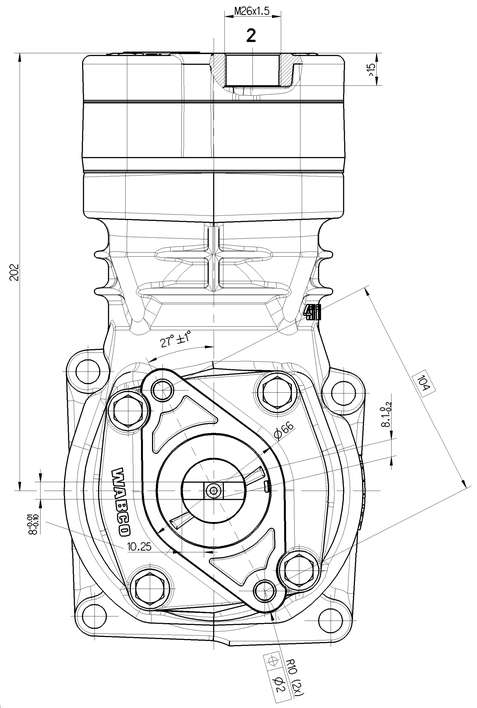

WORKING MEDIUM BETRIEBSMEDIUM :	AIR LUFT
COOLANT KUEHLMEDIUM :	WATER WITH ANTIFREEZE WASSER MIT FROSTSCHUTZ
BORE BOHRUNG :	Ø 85 mm
STROKE HUB :	42mm
SWEPT VOLUME HUBRAUM :	238 cm^3
MAX. WORKING SPEED MAX. BETRIEBSDREHZAHL :	n_{max} = 3000 min^{-1}
OVERSPEED (TEMPORARILY < 4 Sec.) UEBERDREHZAHL (KURZZEITIG < 4 Sek.) :	n_{ue} = 1.3 x n_{max}
MAX. WORKING PRESSURE MAX. BETRIEBSDRUCK :	p_e = 12.5 bar
MAX. PRSSURE HOECHSTDRUCK :	p_e = 16 bar *

* MEASURING POINT : DISCHARGE PORT
MESSPUNKT : DRUCKANSCHLUSS

END PLAY OF CRANKSHAFT
AXIALSPIEL DER KURBELWELLE : 0.05...0.35 mm

LUBRICATION : LUBRICATION SUPPLIED FROM ENGINE
SCHMIERART : UMLAUFSCHMIERUNG MIT DRUCKOELANSCHLUSS

FREE FROM ASBESTOS
ASBESTFREI

PORTS PROTECTED
ANSCHLUESSE GESCHUETZT

CRANKCASE: SURFACE PROTECTION JED-069M1 (OPTIONAL)
KURBELGEHAEUSE: OBERFLAECHENSCHUTZ JED-069M1 (WAHLWEISE)

MAX. PERMISSIBLE TILT DURING CONTINUOUS WORKING
MAX. ZULAESSIGE NEIGUNG IM DAUERBETRIEB :

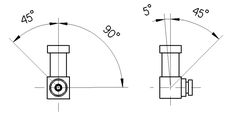

0 = INLET PORT
SAUGANSCHLUSS M: < 100 Nm

2 = DISCHARGE PORT
DRUCKANSCHLUSS M : < 100 Nm

81 = OIL SUPPLY
DRUCKOELANSCHLUSS

82 = OIL DRAIN
OELRUECKLAUF

91 = COOLANT CONNECTION
92 KUEHLMITTELANSCHLUSS M : < 35 Nm

91 ⇄ 92 DIRECTIONS OF FLOW
DURCHSTROEMRICHTUNGEN

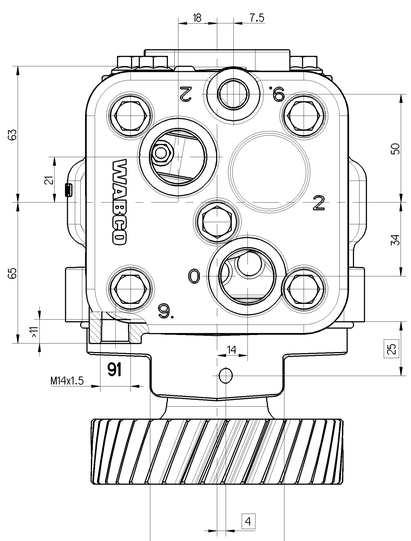

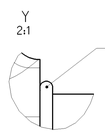

O-RING (Ø118±1 x Ø3±0.1)
897 772 857 4 (WABCO / JED-313 = (ACM / SHORE A 70±5)
(DAIMLER / DBL 6038.20 = ELASTOMER/SHORE A 70±5)

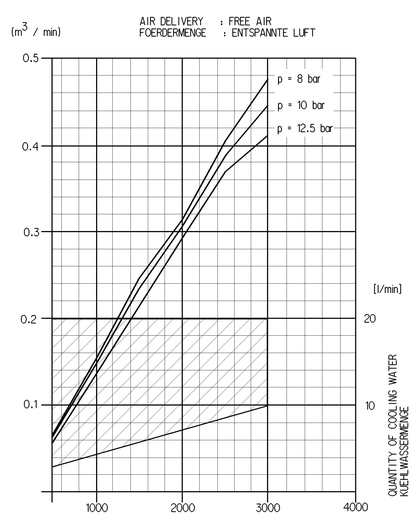

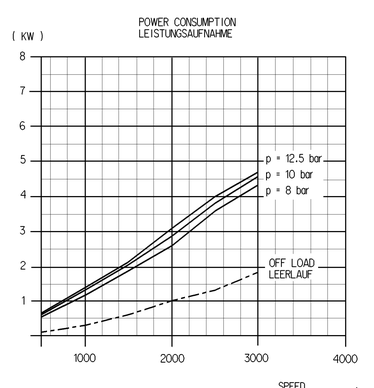

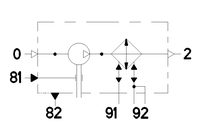

CLEANLINESS OF PARTS AND DEVISES: JED-593 (SPECIFICATION T.B.D.)
SAUBERKEIT VON GERAETEN UND TEILEN:

(FINAL DEFINITION AFTER INVESTIGATION WITH SUPPLIER MANAGEMENT CUSTOMER AND WABCO)
(ENTGUELTIGE FESTLEGUNG NACH ERFOLGTEN UNTERSUCHUNGEN MIT DEM LIEFERANTENMANAGEMENT VOM KUNDEN UND WABCO)

General Specification: JED-334-1 , Size ISO 14405 LP					
Further Technical Data: 411 151 000 0					
Doc. Code: 035	Sheet: 01 Ts 07				
General Tolerances JED-261					
Class 1)	Range of Nominal Dimensions (in mm) ≥ 0 ≥ 6	> 6 ≤ 30	> 30 ≤ 120	> 120 ≤ 400	> 400
Fine	0.5	1.0	1.5	2.0	
Medium X	1.0	2.0	3.0	4.0	±3°
Coarse	2.0	3.5	5.0	6.5	
Tapped Holes acc. JED-152					
1) Tolerance Class Applied Crossmarked					

Copyright WABCO®

Date	Drawn	Signature
2015-12-01	Oliveira	
Checked		
2015-12-02	Hoelzel	
Chief		
Hoelzel		

WABCO

SINGLE CYLINDER COMPRESSOR
EINZYLINDER KOMPRESSOR

Mass	Scale	Material No.	Date of first issue: 1994-02-22		
9.9 kg	1:1 (2:1)	411 151 000 0	Doc.Code	Language	Sheet
			005	DE	1/1
Size	CAD System				
A 0	CREO				

ECN-No.	Revision	Techn. Resp.	Replacement for
169171	1x P	5000	

100mm

Toda comunicação ou reprodução de este documento, bem como utilização e comunicação do seu conteúdo não autorizadas, salvo autorização expressa. Os infratores ficam obrigados a indemnização de todos os prejuízos. Todas as patentes, marcas registadas, desenhos de utilidade e modelos registados são reservados. Sujeitos a alterações técnicas. Reproduzir, usar e comunicar o conteúdo deste documento não autorizados, salvo para fins internos. Infratores obrigados a indemnização de todos os danos. Reservados todos os direitos de patente, marca registada, desenho ou modelo de utilidade.

Copyright. This document and parts to others and the use or communication of the contents thereof are forbidden without express authority. Offenders are liable to the payment of damages. All rights are reserved in the event of the grant of a patent or the registration of a utility model or design. Subject to technical modification. Reproduction, use and communication of the contents of this document are forbidden without express authority. Offenders are liable to the payment of damages.

Esta comunicación o reproducción de este documento, así como el uso y la comunicación de su contenido no están permitidos, salvo autorización expresa. Los infractores quedan obligados a indemnizar por todos los daños. Todas las patentes, marcas registradas, diseños industriales y modelos de utilidad registrados están reservados. Sujetos a modificaciones técnicas.