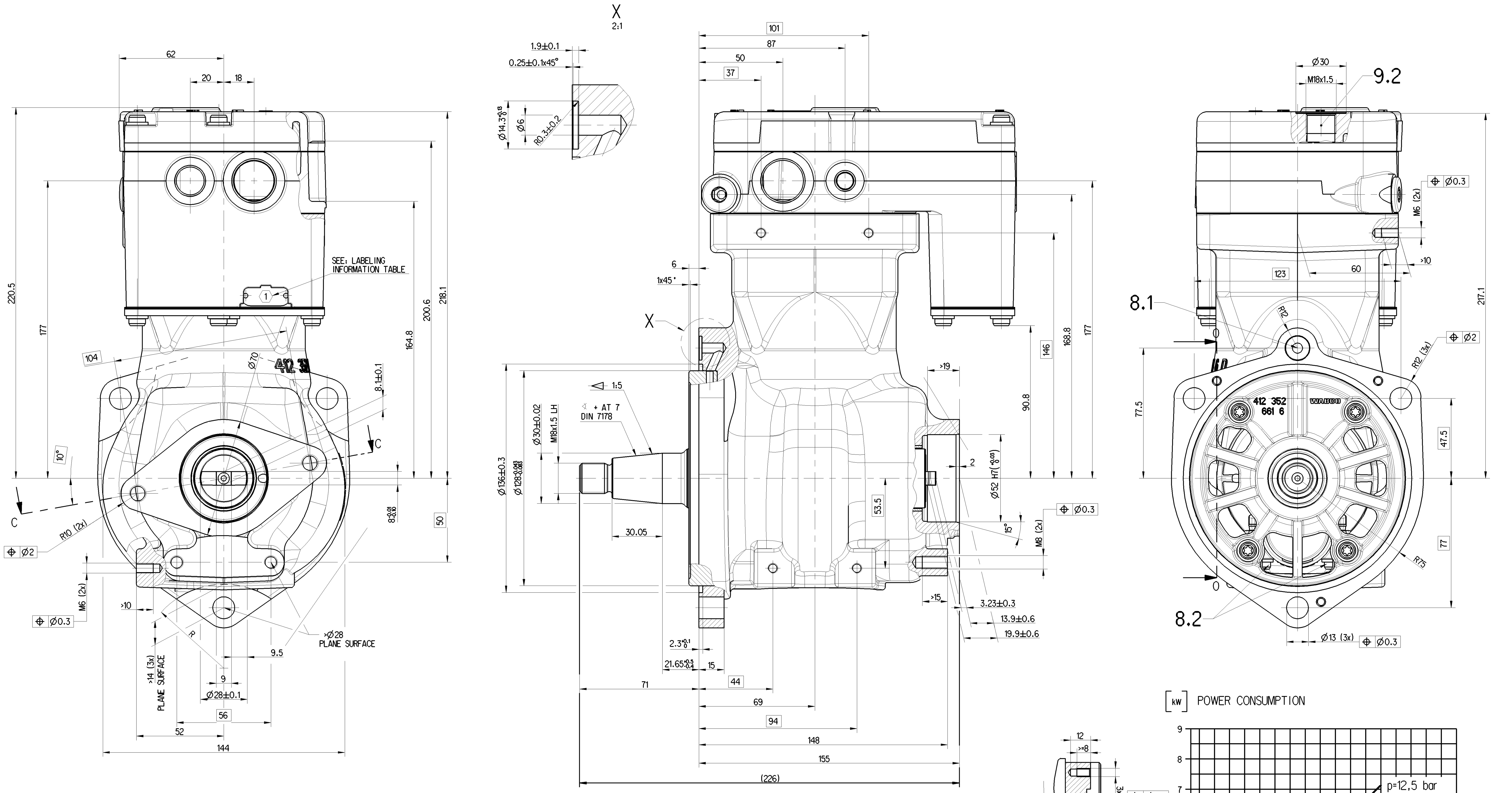

WORKING MEDIUM	AIR
COOLANT	WATER WITH ANTIFREEZE
BORE	Ø 85 mm
STROKE	62 mm
SWEPT VOLUME	352 cm^3
MAX. WORKING SPEED	n_{max} = 3000 min^{-1}
OVERSPEED (MAX. 4 SEC.)	n_{ue} = 1.3 x n_{max}
END PLAY OF CRANKSHAFT	0.08 ... 0.38
MAX. WORKING PRESSURE	14 bar ⟨2⟩
TOP PRESSURE (MAX. 4 SEC)	16 bar ⟨2⟩
LUBRICATION SUPPLIED FROM ENGINE	
FREE FROM ASBESTOS	

⟨2⟩ MEASURE AT DISCHARGE PORT

MAX. PERMISSIBLE TILT DURING CONTINOUS WORKING

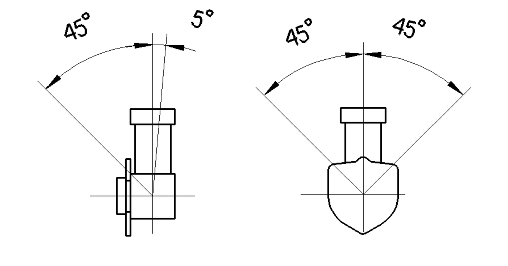

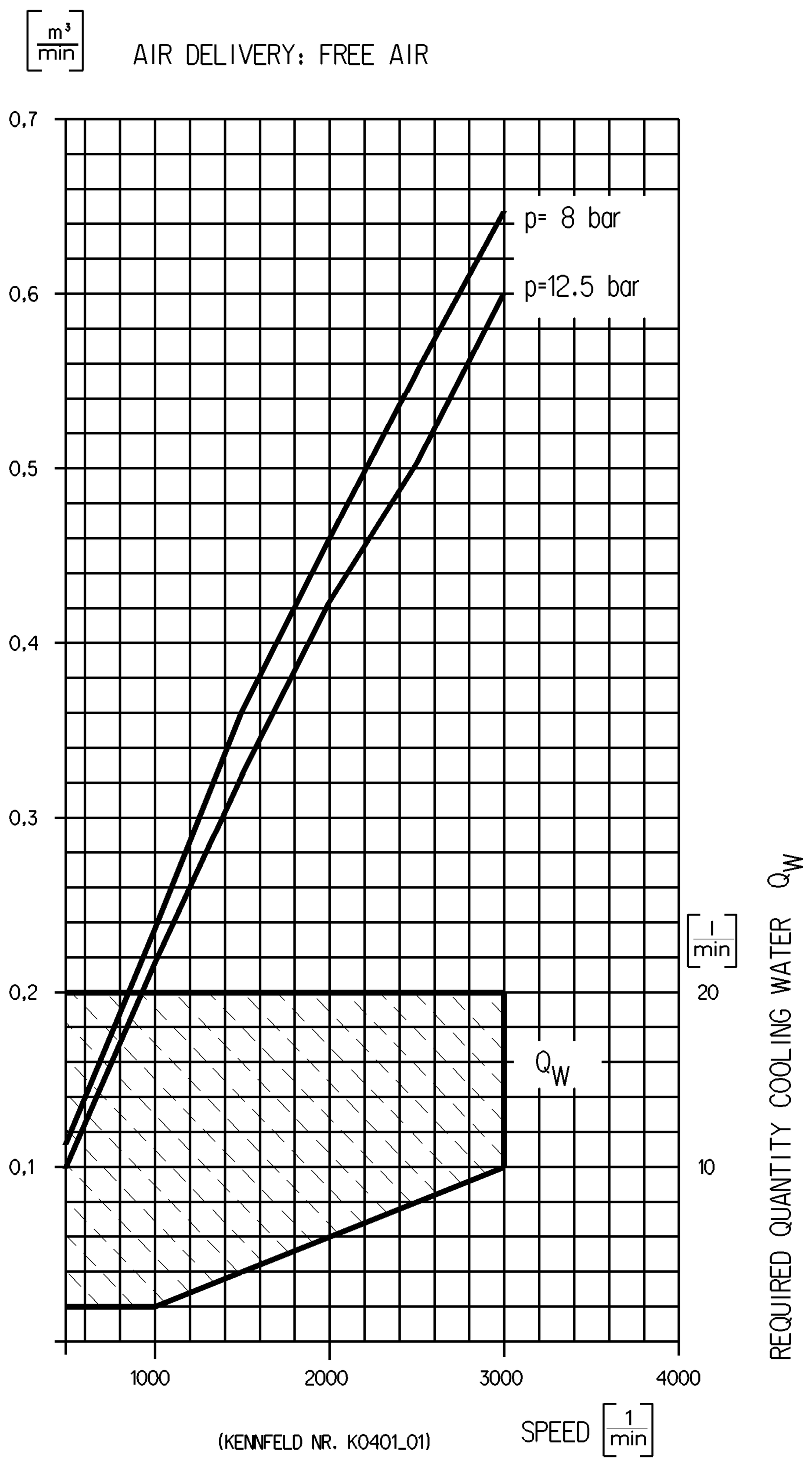

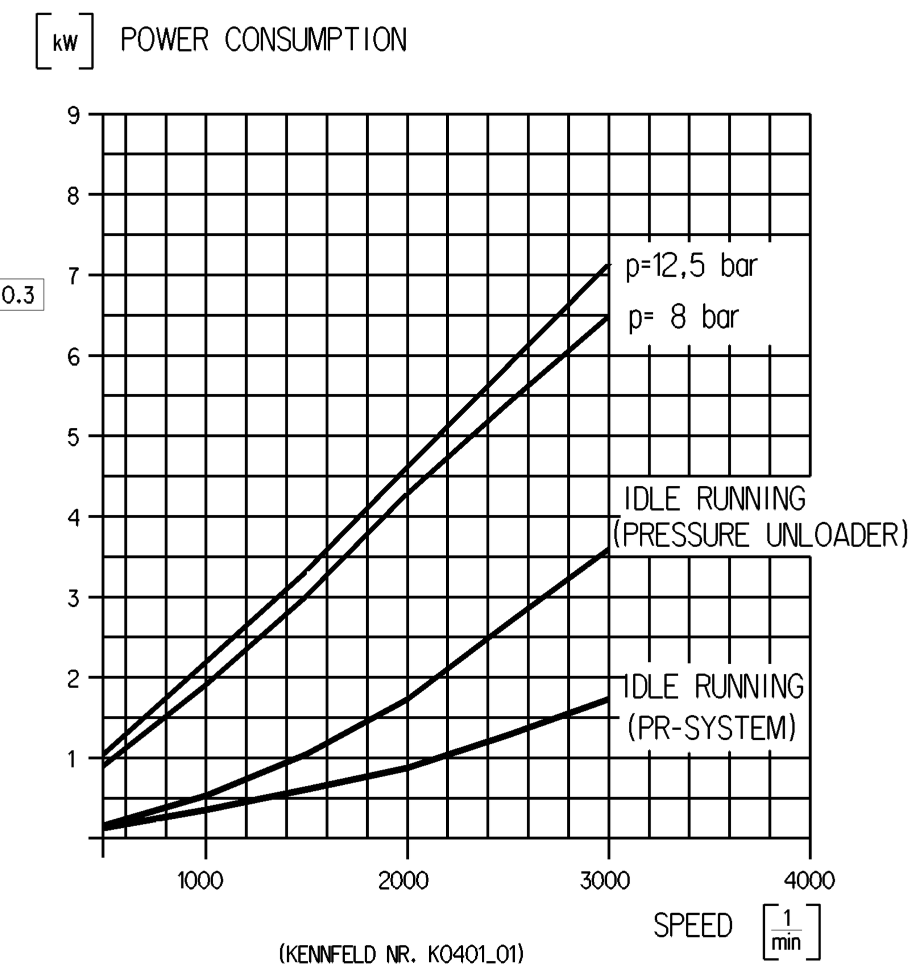

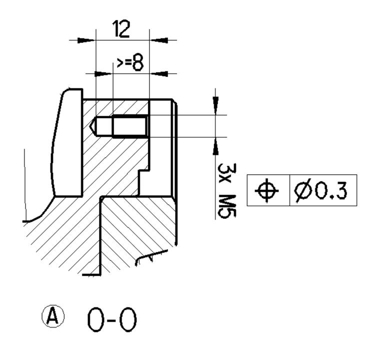

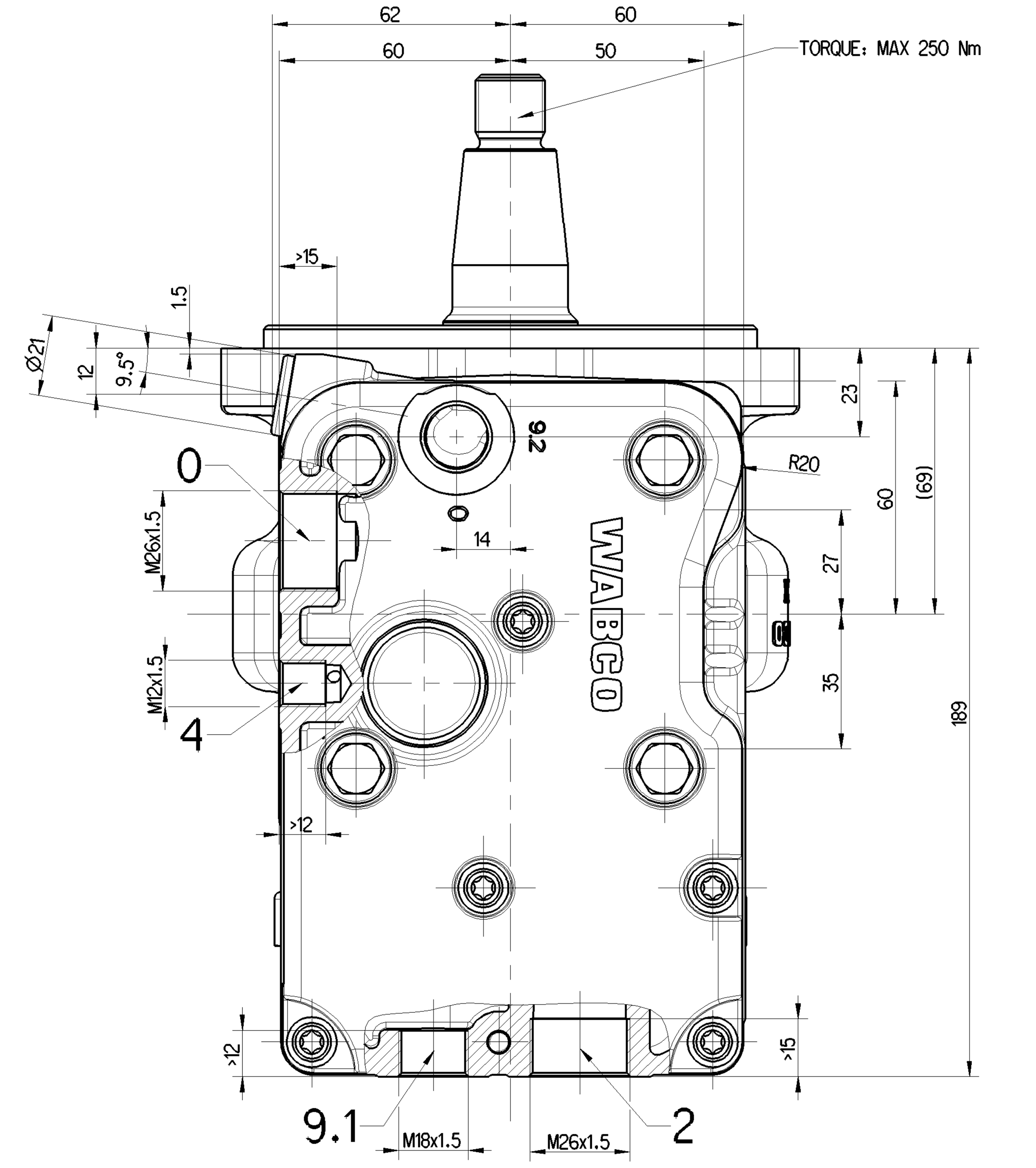

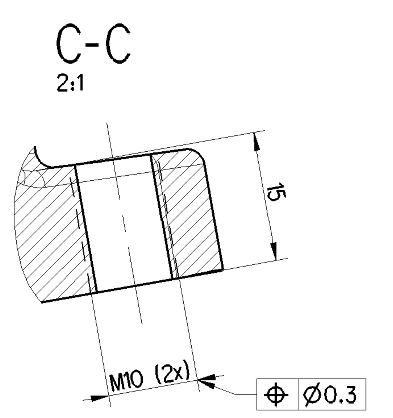

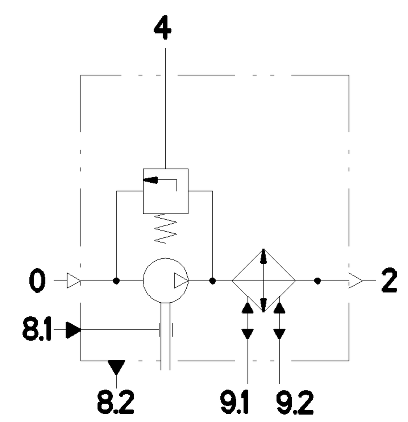

0	SUCTION PORT	M <= 100 Nm
2	DISCHARGE PORT	M <= 100 Nm
4	GOVERNOR PORT	M <= 25 Nm
8.1	OIL SUPPLY	
8.2	OIL DRAIN	
9.1 9.2	COOLANT CONNECTION	M <= 35 Nm

(...) AUXILIARY DIMENSION

** ALSO VALID FOR PRI: 037, 003, 105, 008.

LABELING INFORMATION TABLE (SEE ALSO DOC.922)

PRODUCTION SITE	LABEL	LABEL ID NUMBER	LABEL LAYOUT
048 **	⟨1⟩	899 050 145 4	PRODUCTION DATE / WABCO ID NUMBER

General Specification: JED-334-0						
Further Technical Data: 412 352 020 0						
Doc. Code: 035			Sheet: 1 To 5			
General Tolerances JED-261						
Class 1)		≤ 50	> 50 ≤ 180	> 180 ≤ 400	> 400	
Fine		0.5	1.0	1.5	2.0	
Medium	X	1.0	2.0	3.0	4.0	±3°
Coarse		2.0	3.5	5.0	6.5	
Tapped Holes acc.						
1) Tolerance Class Applied Crossmarked						

Date	Signature	
Drawn		
2023-07-06	Matyja	
Checked		
2023-07-06	Slobodzian	
Expert		
	Plonski	

Copyright WABCO®

WABCO

SINGLE CYLINDER COMPRESSOR

Mass	Scale	Material No.	Date of first issue: 2017-03-06		
13.4 KG	1:1	412 352 020 R	Doc.Code 005	Language EN	Sheet 1/1
Size A 0	CAD System CREO	ECN-No. 512874 / Revision 1x A / Techn. Resp. 5000_RM	Replacement for /		

Toute Communication ou reproduction de ce document, toute exploitation ou communication de son contenu sont interdites, sauf autorisation expresse. Tout manquement à cette règle constitue un abus évident et expose son auteur au versement de dommages et intérêts. Tous droits de propriété industrielle reservés, notamment en matière de brevets et de modèles.
Weitergabe sowie Vervielfältigung dieser Unterlage, Verwertung und Mitteilung ihres Inhalts nicht gestattet, soweit nicht ausdrücklich zugestanden. Zuwiderhandlungen stellen einen offensichtlichen Missbrauch dar und verpflichten zu Schadenersatz. Alle Rechte fuer den Fall der Patenterteilung oder Gebrauchsmuster-Eintragung vorbehalten.
Non è permesso consegnare a terzi o riprodurre questo documento, ne utilizzarne il contenuto o renderlo comunque noto a terzi senza autorizzazione esplicita. Ogni infrazione costituirà un evidente abuso e comporterà il risarcimento dei danni subiti. E' fatta riserva di tutti i diritti derivanti da brevetti o modelli.
Copying of this document and giving it to others and the use or communication of the contents thereof, are forbidden without express authority. Contravention of this restriction will constitute an evident abuse and result in a liability to the payment of damages. All rights are reserved in the event of the grant of patent or registration of a utility model or design. This document is the subject of copyright.