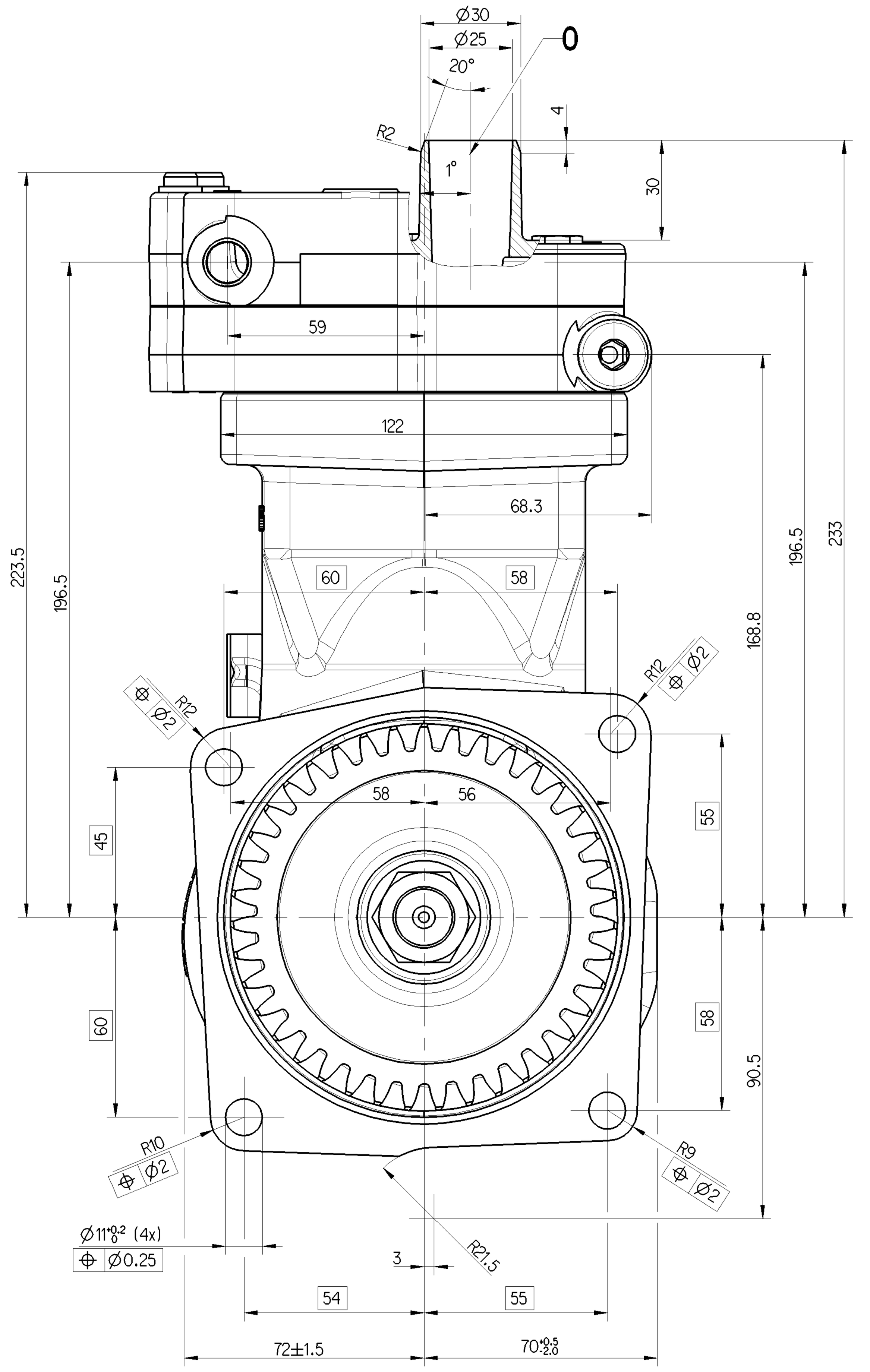


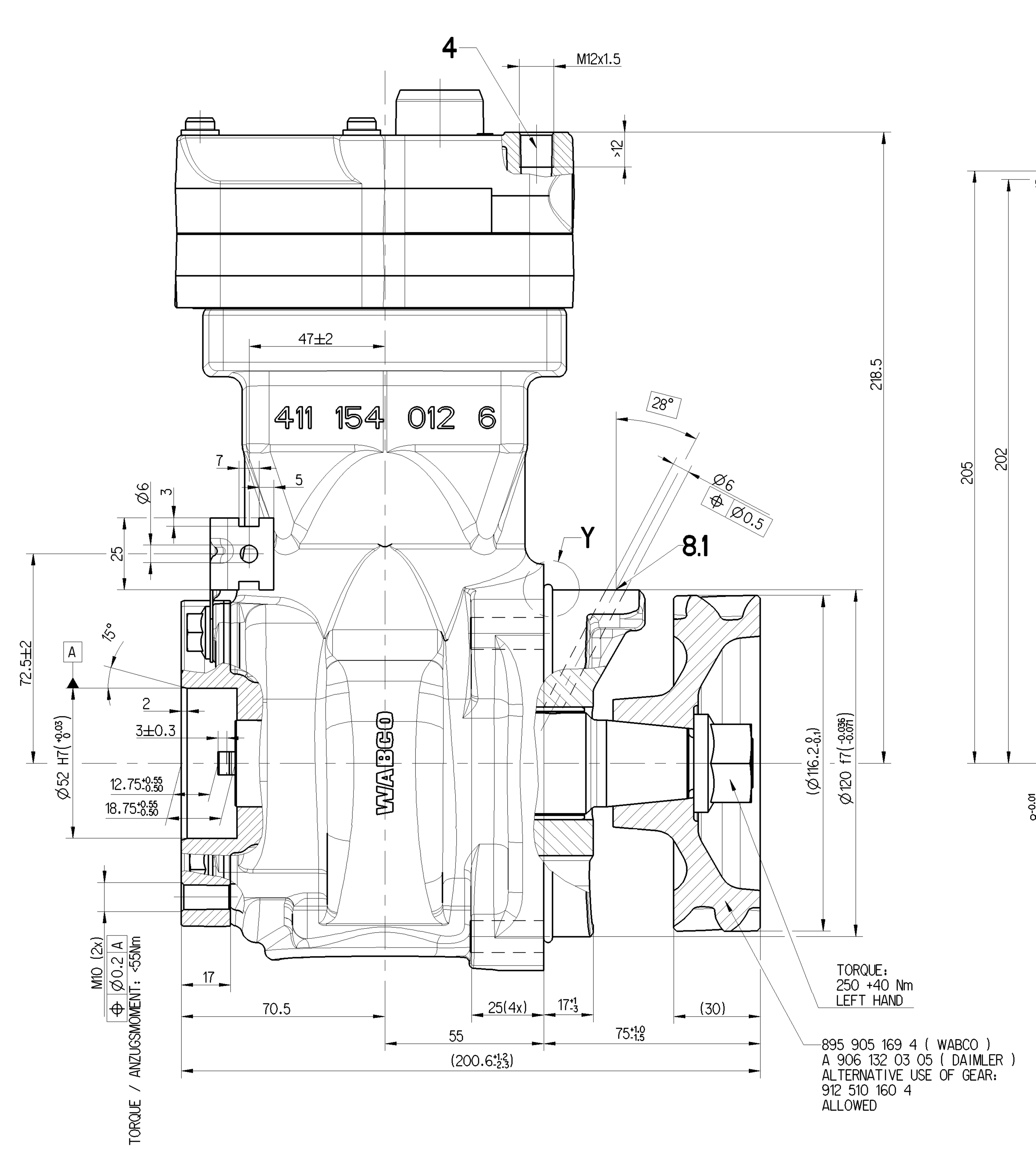


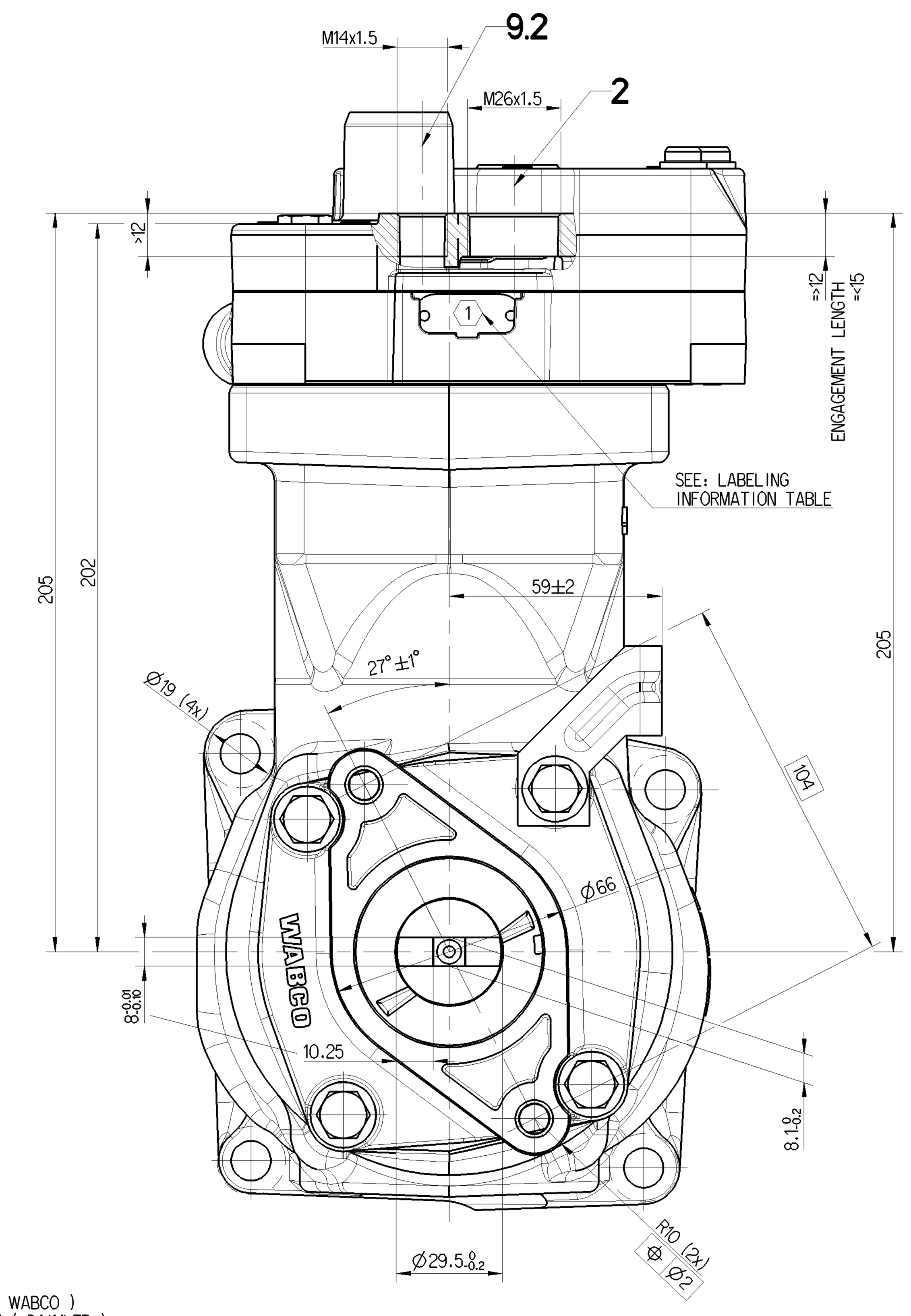


Y
2:1

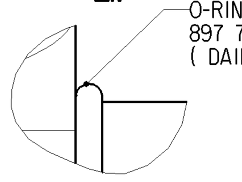

O-RING ( Ø118 ± 1 x Ø3 ± 0.1 )
897 772 857 4 ( WABCO/JED-313 = (ACM)/SHORE A 70±5 )
( DAIMLER / DBL 6038.20 = ELASTOMER/SHORE A 70±5 )

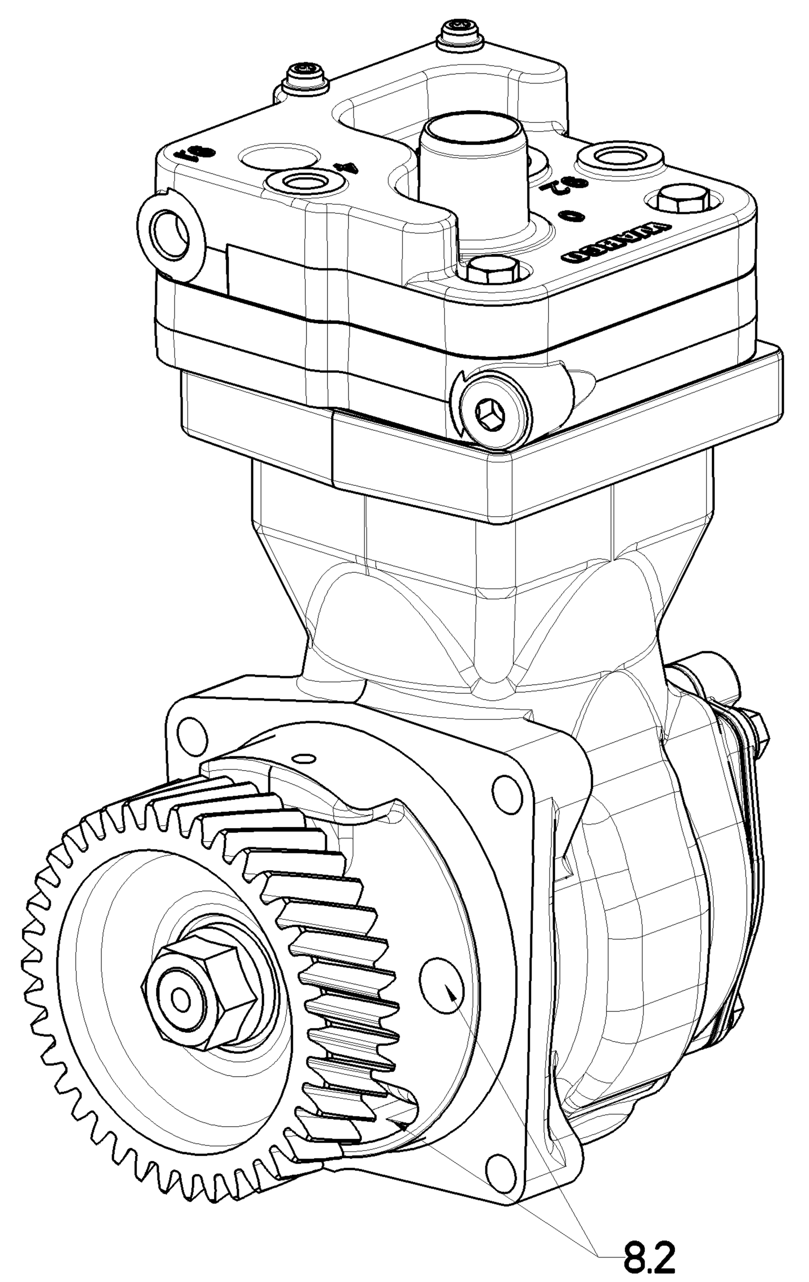


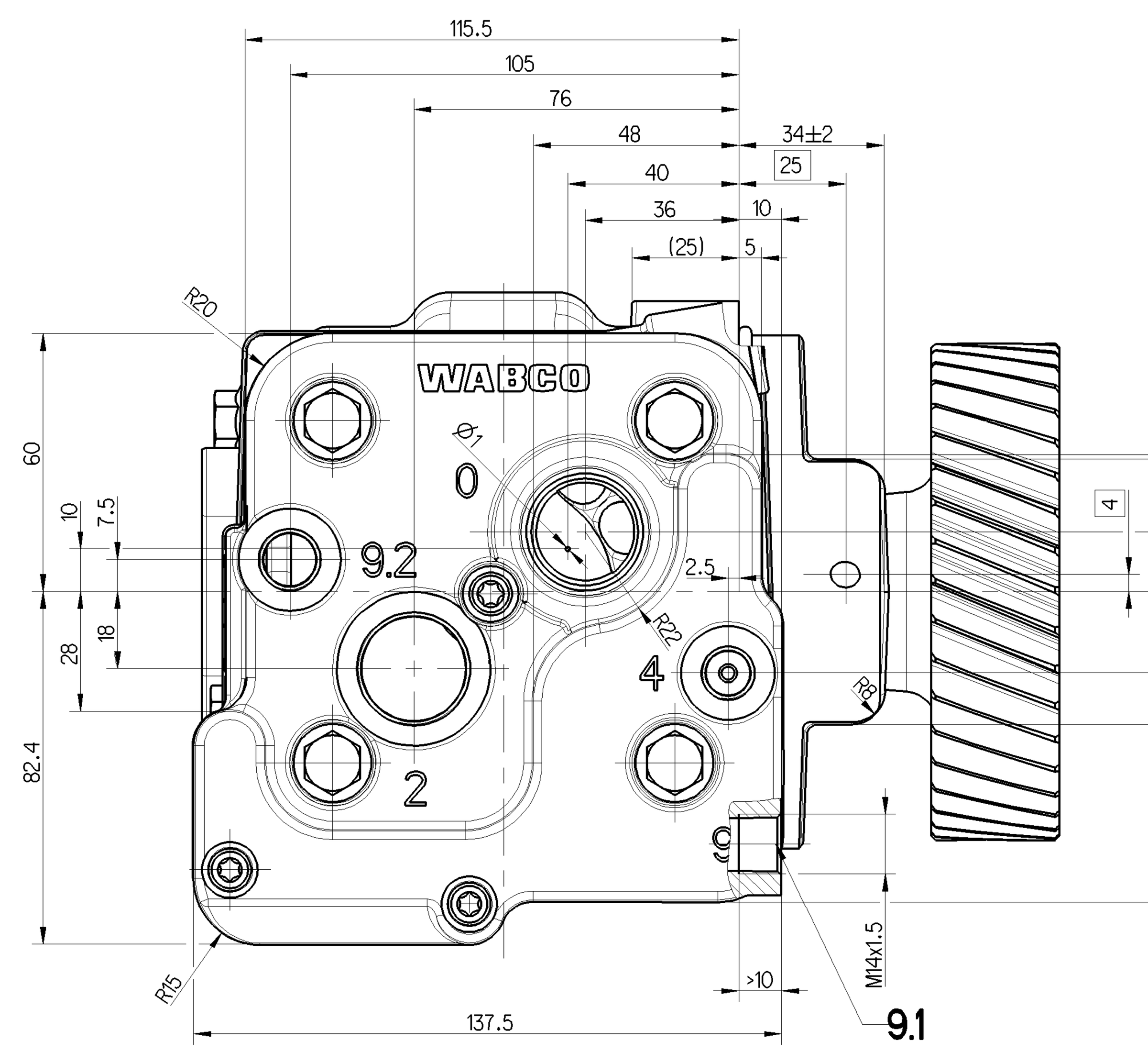


| WORKING MEDIUM | AIR |
|---|---|
| COOLANT | WATER WITH ANTIFREEZE |
| BORE | Ø 85 mm |
| STROKE | 62 mm |
| SWEPT VOLUME | 352 $cm^3$ |
| MAX. WORKING SPEED | $n_{max}$ = 3000 $min^{-1}$ |
| OVERSPEED (MAX. 4 SEC.) | $n_{ue}$ = 1.3 x $n_{max}$ |
| END PLAY OF CRANKSHAFT | 0.05 ... 0.35 |
| MAX. WORKING PRESSURE | 12.5 bar ⟨2⟩ |
| TOP PRESSURE (MAX. 4 SEC) | 16 bar ⟨2⟩ |
| LUBRICATION SUPPLIED FROM ENGINE | |
| PAINTED BLACK ON NOT MACHINED CAST IRON SURFACES | |
| PORTS PROTECTED | |
| FREE FROM ASBESTOS | |
| CRANKCASE: SURFACE PROTECTION JED-069M1 (OPTIONAL) | |

⟨2⟩ MEASURE AT DISCHARGE PORT

MAX. PERMISSIBLE TILT DURING CONTINOUS WORKING

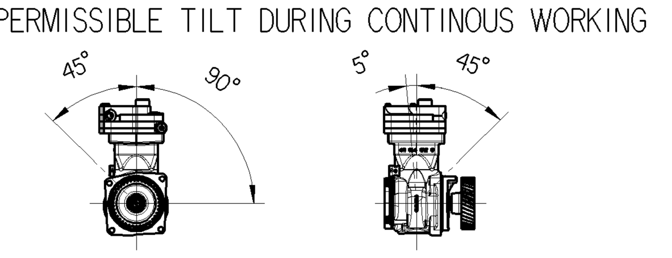


| | | |
|---|---|---|
| 0 | SUCTION PORT | |
| 2 | DISCHARGE PORT | M <= 100 Nm |
| 4 | GOVERNOR PORT | |
| 8.1 | OIL SUPPLY | |
| 8.2 | OIL DRAIN | |
| 9.1<br>9.2 | COOLANT CONNECTION | M <= 35 Nm |

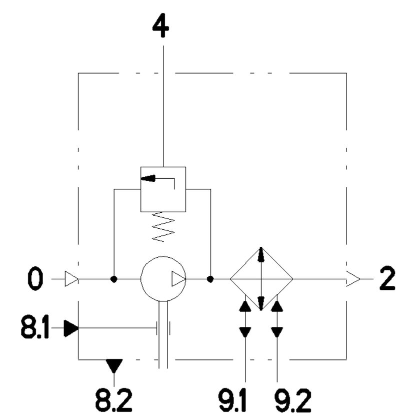


9.1 ⇄ 9.2 DIRECTIONS OF FLOW

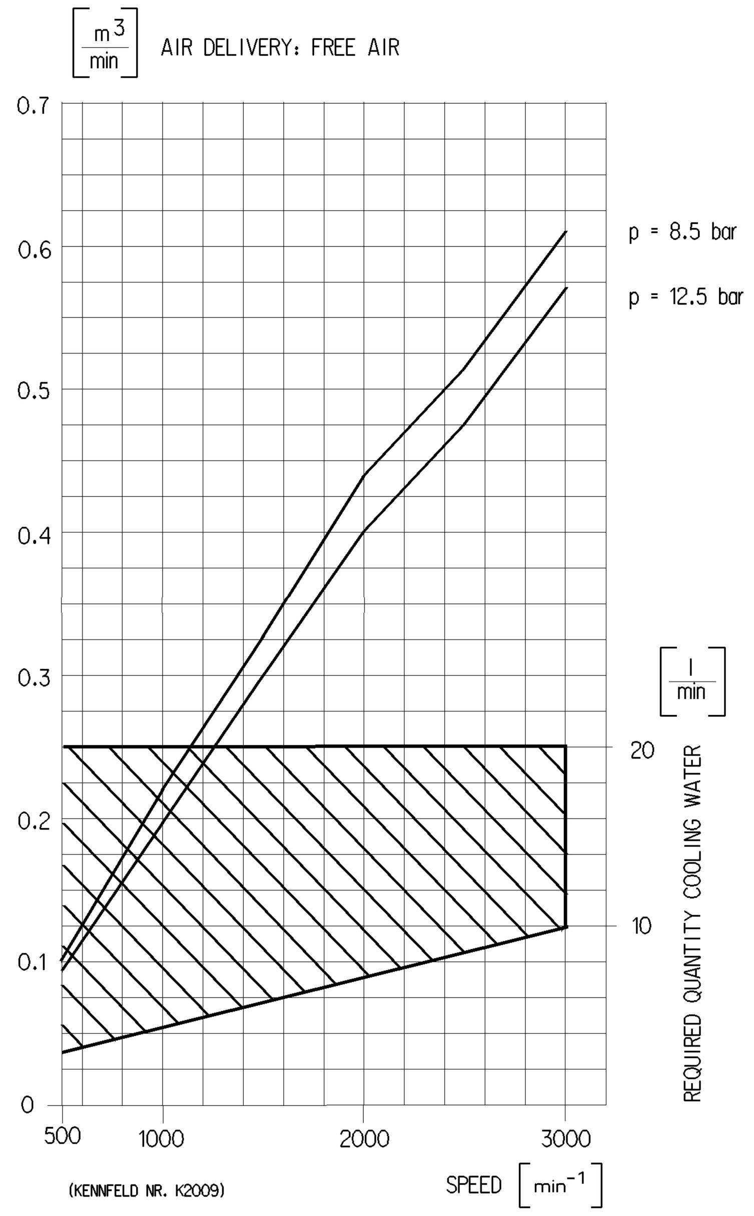


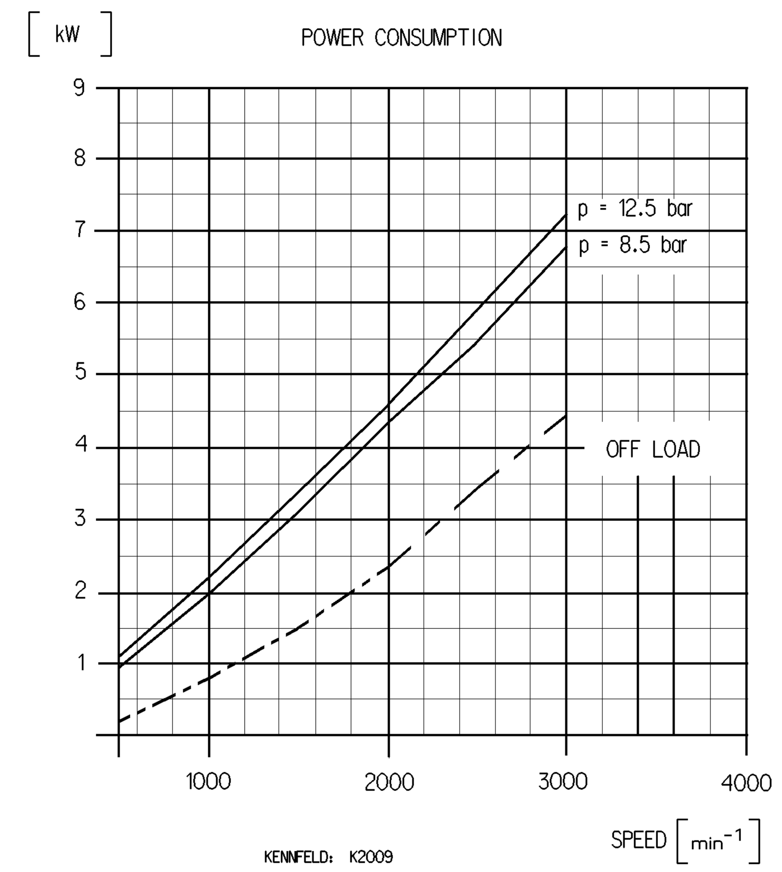


(...) AUXILIARY DIMENSION

** ALSO VALID FOR PRI: 037, 003, 105, 008.

LABELING INFORMATION TABLE (SEE ALSO DOC.922)

| PRODUCTION SITE | LABEL | LABEL ID NUMBER | LABEL LAYOUT |
|---|---|---|---|
| 048 ** | ⟨1⟩ | 899 050 145 4 | PRODUCTION DATE / WABCO ID NUMBER |

| | | | | | | | |
|---|---|---|---|---|---|---|---|
| General Specification: JED-334-0 | | | | | | | |
| Further Technical Data: 412 352 025 0 | | | | | | | |
| Doc. Code: 035 | | | Sheet: 1 To 5 | | | | |
| General Tolerances JED-261 | | | | | | | |
| | | Range of Nominal Dimensions ( ± mm) | | | | | |
| Class 1) | | ≤ 50 | > 50 ≤ 180 | > 180 ≤ 400 | > 400 | | |
| Fine | | 0.5 | 1.0 | 1.5 | 2.0 | | |
| Medium | X | 1.0 | 2.0 | 3.0 | 4.0 | ±3° | |
| Coarse | | 2.0 | 3.5 | 5.0 | 6.5 | | |
| Tapped Holes acc. JED-152 | | | | | | | |
| 1) Tolerance Class Applied Crossmarked | | | | | | | |

Copyright WABCO®

| Date | Signature |
|---|---|
| Drawn | |
| 2017-03-07 | Trokajlo |
| Checked | |
| 2017-03-08 | Slobodzian |
| Expert | |
| | Plonski |

**WABCO**

ONE CYLINDER COMPRESSOR

| Mass | Scale | Material No. | Date of first issue: 2017-03-08 | | |
|---|---|---|---|---|---|
| 13.335 KG | 1:1 | 412 352 025 R | Doc.Code 005 | Language EN | Sheet 1/1 |
| Size A 0 | CAD System CREO | | | | |
| ECN-No. - | Revision - - | Techn. Resp. 2009 | Replacement for - | | |

Toute Communication ou reproduction de ce document, toute exploitation ou communication de son contenu sont interdites, sauf autorisation expresse. Tout manquement à cette règle constitue un abus évident et expose son auteur au versement de dommages et intérêts. Tous droits de propriété industrielle réservés, notamment en matière de brevets et de modèles.
Weitergabe sowie Vervielfältigung dieser Unterlage, Verwertung und Mitteilung ihres Inhalts nicht gestattet, soweit nicht ausdrücklich zugestanden. Zuwiderhandlungen stellen einen offensichtlichen Missbrauch dar und verpflichten zu Schadenersatz. Alle Rechte fuer den Fall der Patenterteilung oder Gebrauchsmuster-Eintragung vorbehalten.
Non è permesso consegnare a terzi o riprodurre questo documento, ne utilizzarne il contenuto o renderlo comunque noto a terzi senza autorizzazione esplicita. Ogni infrazione costituira un evidente abuso e comportera il risarcimento dei danni subiti. E' fatta riserva di tutti i diritti derivanti da brevetti o modelli.
Copying of this document and giving it to others and the use or communication of the contents thereof, are forbidden without express authority. Contravention of this restriction will constitute an evident abuse and result in a liability to the payment of damages. All rights are reserved in the event of the grant of patent or registration of a utility model or design. This document is the subject of copyright.