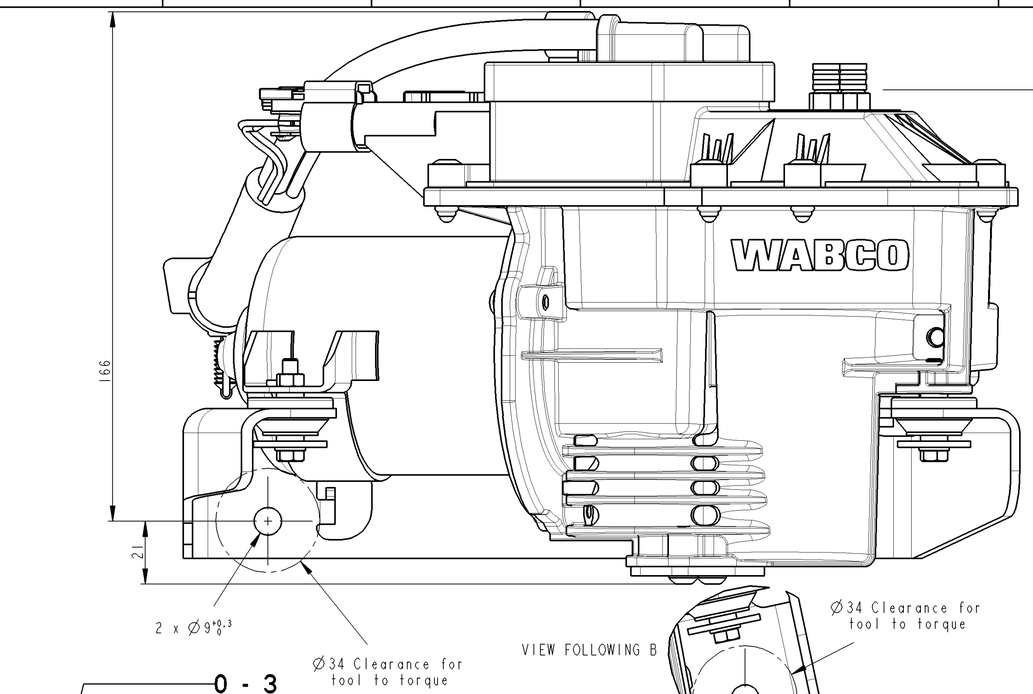

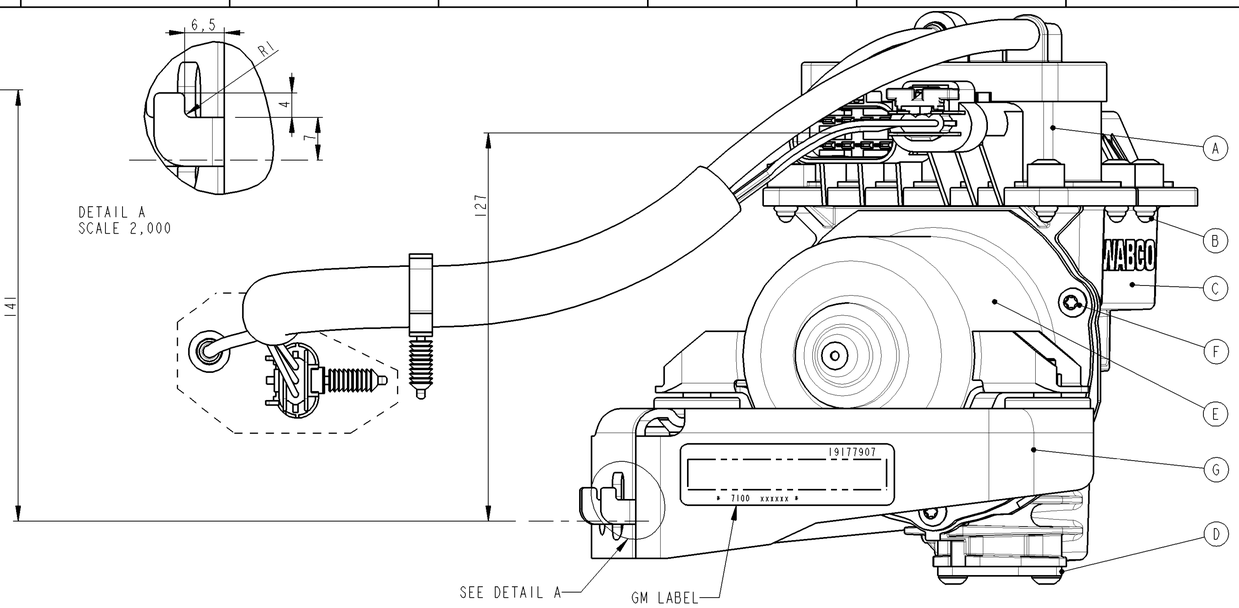

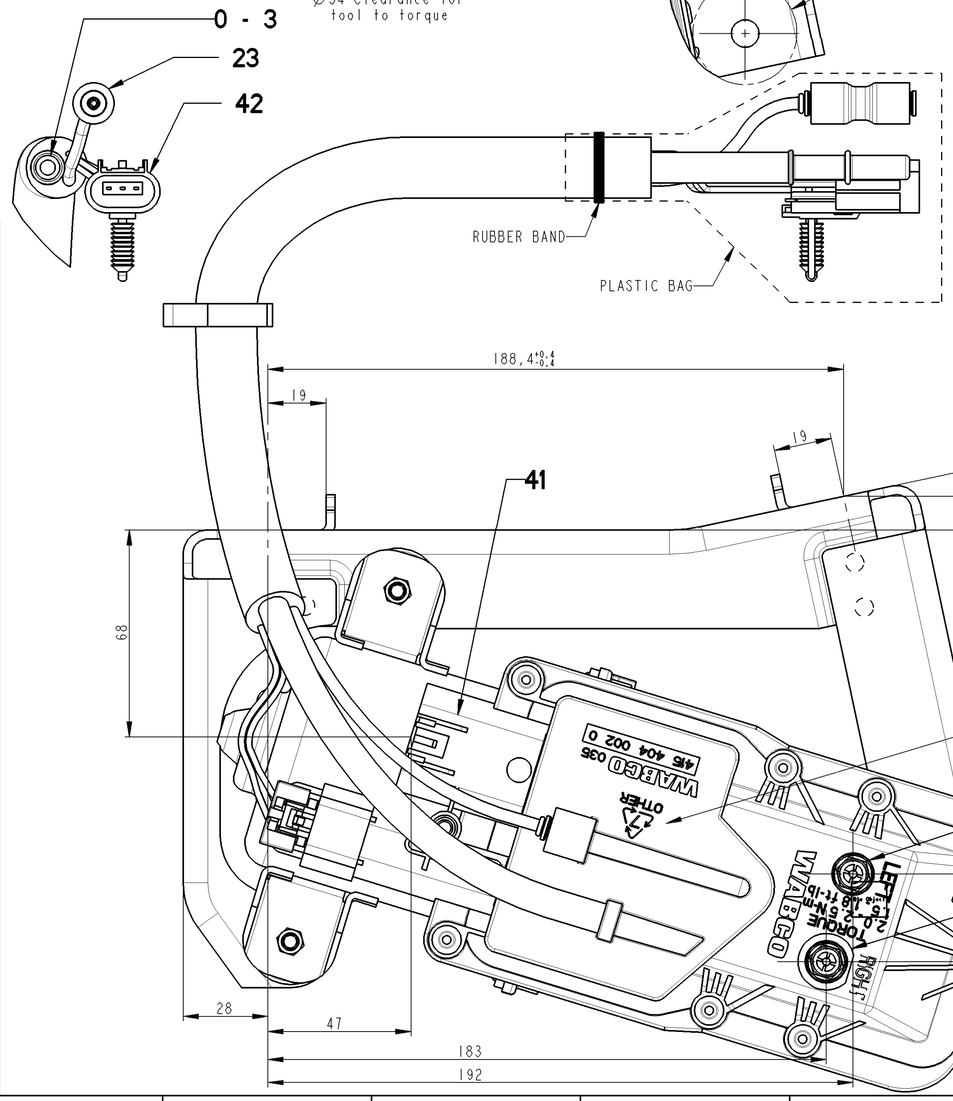

TYPE OF CURRENT NATURE DU COURANT	DIRECT CURRENT COURANT CONTINU
OPERATING VOLTAGE VOLTAGE DE SERVICE	12 V +4 -3
TYPE OF PROTECTION ACCORD. TO EN 60529 MODE DE PROTECTION SUIVANT EN 60529	IP 68
ECU version Version d'UCE	L

MAXIMUM PRESSURE VALVE SETTING: Dynamic opening pressure under flow rate of the compressor 650 KPa +100/-0 KPa on a new device

LEAKAGE RATE AT THE OUTLETS TO AIR SPRINGS: 0,05 cm³/min (expanded air) at maximum working pressure

CHARACTERISTIC DIAGRAMM :

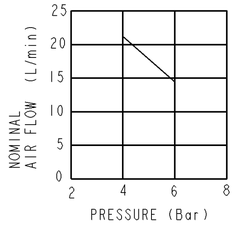

0	INLET ASPIRATION
21	LEFT AIR SPRING DISCHARGE PORT REFOULEMENT COUSSIN GAUCHE
22	RIGHT AIR SPRING DISCHARGE PORT REFOULEMENT COUSSIN DROIT
23	INFLATE LINE DISCHARGE PORT REFOULEMENT LIGNE DE GONFLAGE
3	EXHAUST ECHAPPEMENT
41	ELECTRICAL CONTROL PORT ORIFICE DE COMMANDE ELECTRIQUE
42	ELECTRICAL CONTROL PORT ORIFICE DE COMMANDE ELECTRIQUE

Torque for push in fitting = 2Nm +0.5 0 (21 & 22)

Online 21, 22, 23, use 4.0mm OD nylon tubing to meet performance specification DIN 74324

"LEGIBLE PLASTIC COMPOUND IDENTIFICATION SYMBOL, PER ISO 11469, MUST APPEAR ON SURFACE, RAISED OR DEPRESSED 0.3 - 0.4mm MUST NOT AFFECT APPEARANCE, FUNCTION OR ASSEMBLY. OMISSION REQUIRES APPROVAL BY GM ENGINEERING."

21 LEFT AIR SPRING
COUSSIN GAUCHE

22 (WHITE) RIGHT AIR SPRING
(BLANC) COUSSIN DROIT

MATERIAL A: 30% Glass Bead Reinforced Nylon 66 per GM7001M PA66
(A46, A64, BC730, DD1350, F255, K7, L40, S1200, Z1, Z2, Z3)
Z1 = ISO test methods apply
Z2 = Charpy impact strength per ISO 179
8 kJ/m(superscript: 2) @ 23°C
4 kJ/m(superscript: 2) min. @ -40°C
Z3 = Color black

MATERIAL B: wrought aluminium per AA5052
Coating per N/A

MATERIAL C: diecast aluminium meeting properties per list mech. properties & chemical composition from JED029;similar to ISO 3522,Al-Si8 Cu3 Fe
_0,2% proof stress (ISO 6892): >100 (N/mm²)
_Brinell hardness (ISO 6506): 80 - 120 (HB)
Coating per 998-4050

MATERIAL D: HSLA 045X per SAE J1392
Coating per GMW3044M

MATERIAL E: steel scale free per UNS G10080
Coating per 998-4050

MATERIAL F: externally threaded fasteners per GM500M (8.8)
Coating per GMW3044M

MATERIAL G: steel scale free per GMW2MHR2
Coating per GMW3044M

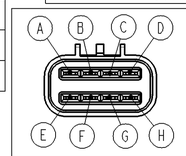

A : HEIGHT SENSOR RIGHT RETURN	RETOUR CAPTEUR DE HAUTEUR DROIT
B : HEIGHT SENSOR LEFT RETURN	RETOUR CAPTEUR DE HAUTEUR GAUCHE
C : VEHICULE SPEED SIGNAL	SIGNAL DE VITESSE DU VEHICULE
D : GROUND	MASSE
E : HEIGHT SENSOR RIGHT SIGNAL	SIGNAL CAPTEUR DE HAUTEUR DROIT
F : HEIGHT SENSOR LEFT SIGNAL	SIGNAL CAPTEUR DE HAUTEUR GAUCHE
G : IGNITION	APC
H : + BATTERY 12V	BATTERIE 12V

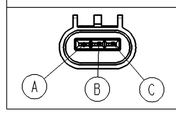

A : SWITCH	INTERRUPTEUR
B : GROUND	MASSE
C : LED	DEL

Restricted and Reportable Substances for parts per GMW3059

DATE	SUFFIX	INITIAL REL FOR PROD PER
07/04/30	-	EWO CXRYA

COMPRESSOR ASM-RR
AIR SPR

GM n° : 19177907

DCN-No.	Rev.	Date
114617	L	2007-09-28
110835	K	2006-09-14
110649	J	20006-08-25

State of Revision

General Specification: JED-334-0
Further Technical Data:
Doc. Code: Sheet: To

General Tolerances JED-261

Class 1)	Range of Nominal Dimensions (± mm) ≤ 50	> 50 ≤ 180	> 180 ≤ 400	> 400	∢
Fine	0.5	1.0	1.5	2.0	±3°
Medium	1.0	2.0	3.0	4.0	
Coarse	2.0	3.5	5.0	6.5	
Tapped Holes acc.					

1) Tolerance Class Applied Crossmarked

Copyright WABCO ®

Date	Signature
Drawn 2000-12-14	JEAN-BAPTISTE
Checked 2000-12-14	LIEVOUX
Expert Stobenow	

WABCO

ELECTRONIC AIR SUPPLY UNIT
ELEKTRONISCH GESTEUERTE LUFTVERSORGUNGSANLAGE
UNITE ELECTRONIQUE DE FOURNITURE D'AIR
UNITA DI ALIMENTAZIONE ARIA CON CONTROLLO ELETTRONICO

Mass	Scale	Material No.	WABCO Id. No.: 415 404 002 0		
4,200 KG	1,000	415 404 002 0	Doc.Code 005	Language ML	Sheet 1/1
Size A 1	TRI 550		Function Code	CAD System Pro/E	Prod.Type 00 X
			Replacement for 884 618 581 0		

100mm

Tutti i diritti sono riservati, anche per quanto riguarda la traduzione, la ristampa, l'esecuzione di fotocopie e la registrazione in sistemi di elaborazione dei dati. Il rispetto dei diritti non esclusivi non comporta alcun diritto al risarcimento danni. Tutti i diritti sono riservati, anche per quanto riguarda la traduzione, la ristampa, l'esecuzione di fotocopie e la registrazione in sistemi di elaborazione dei dati. Il rispetto dei diritti non esclusivi non comporta alcun diritto al risarcimento danni.