WORKING MEDIUM	AIR
TERMAL RANGE OF APPLICATION	-25°...+120°C
WORKING PRESSURE (SUPLY)	p_e = 3...10bar

MIN. FLOW PASSAGE		NOMINAL DIAMETER
PORT 13		VOSS NG8 18.85mm² (=Ø4.9mm)
PORT 25, 26		1.13mm² (=Ø1.2mm)
3/2 SOLENOID	MG1/MG2/MS1/MS2 SUPPLY	2.84mm² (=Ø1.9mm)
3/2 SOLENOID	MG1/MG2/MS1/MS2 EXHAUST	6.6mm² (=Ø2.9mm)

VOLTAGE	$24^{+4}_{-4.4}$ V
TYPE OF CURRENT	DIRECT CURRENT
RELATIVE DUTY CYCLE	100%
NOMINAL CURRENT AT ROOM TEMPERATURE	530mA/MAGNET
DEGREE OF PROTECTION	IP 69 K, IP67
PROTECTION CLASS	III
INSTALLATION POSITION	OPTIONAL

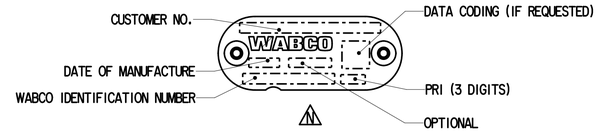

1. PLUG CONNECTION : DIN 72 585-A1-3.1-Sn/K2
2. PORECLASS ACCORDING TO WABCO DIRECTIVE ABOUT PORES AT SEALING SURFACES 3.2 AND 2.3 ALLOWED
3. ADHESIVE LABEL WITH DMC ACCORDING MBN 10495
4. EXTERNAL CENTERING BY THE SPRING
5. EXTERNAL STOP
6. CYLINDER STROKE
7. 17mm HIGH
8. 32mm HIGH

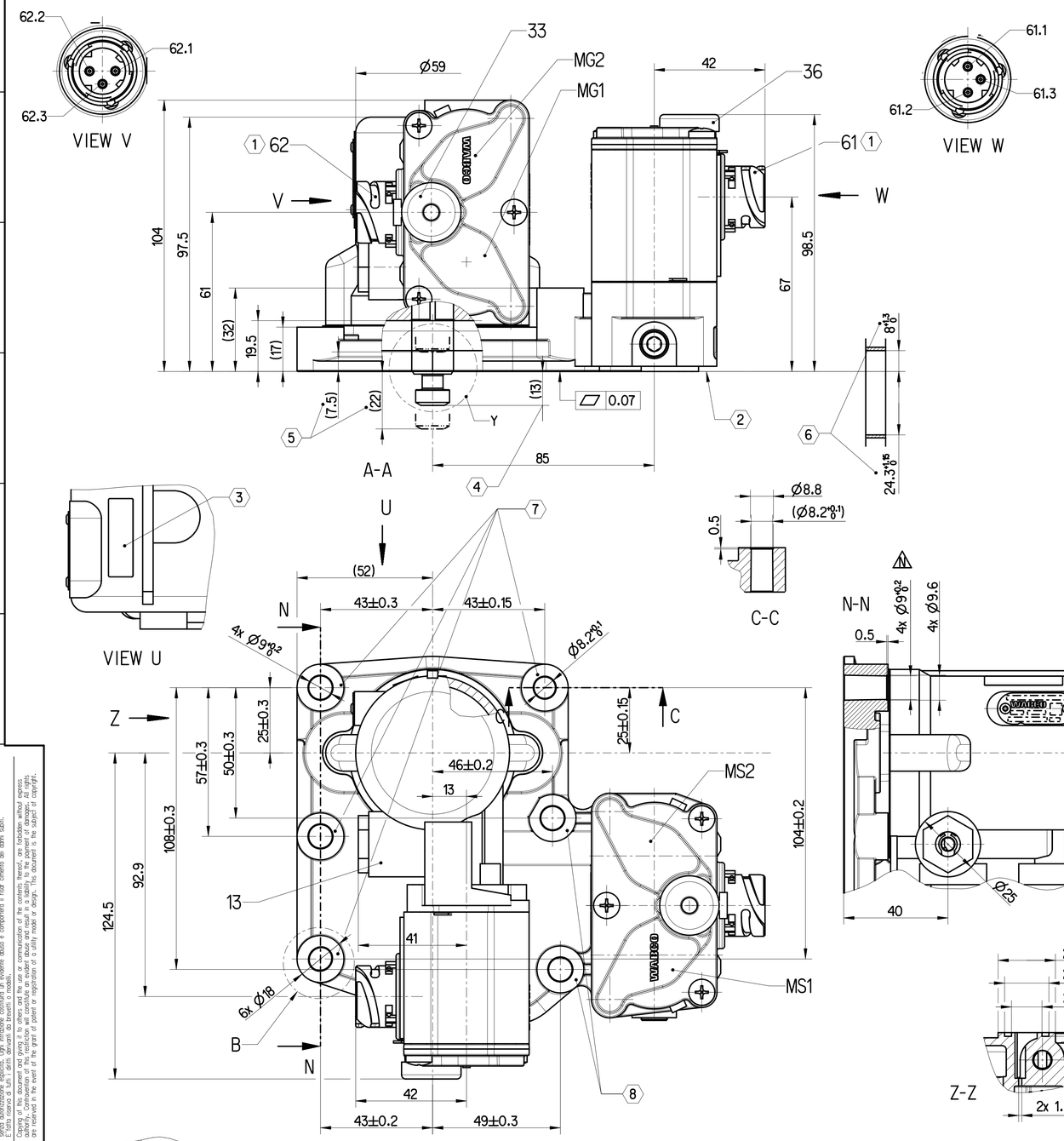

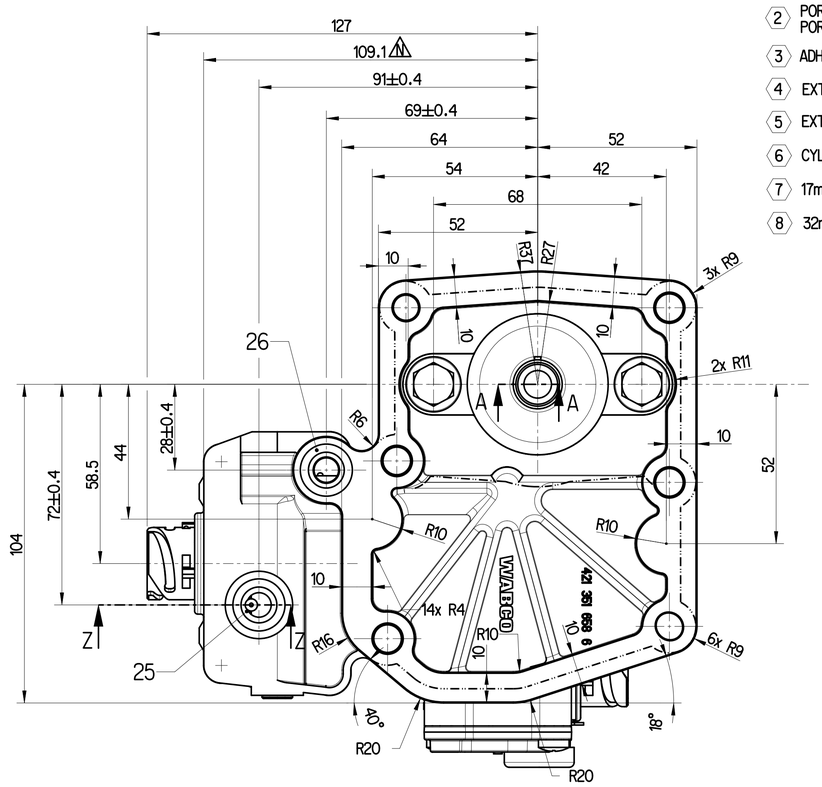

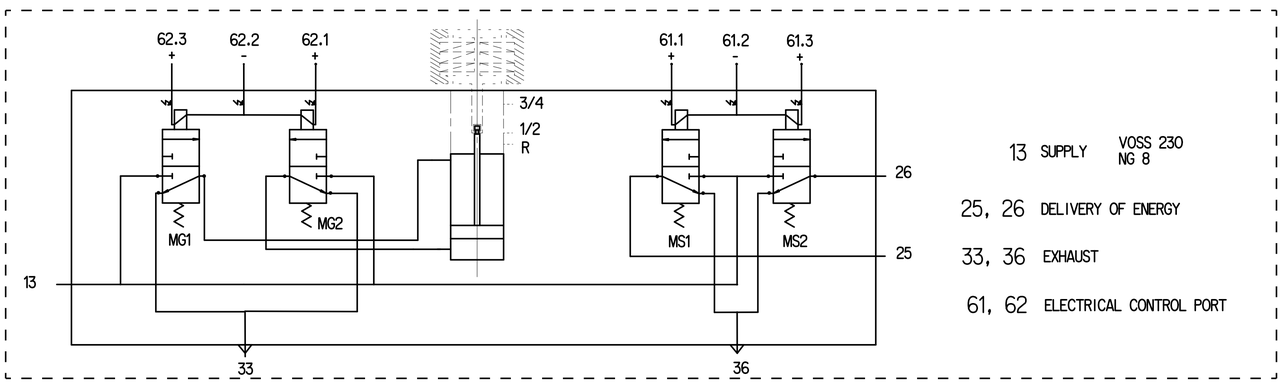

13 SUPPLY VOSS 230 NG 8

25, 26 DELIVERY OF ENERGY

33, 36 EXHAUST

61, 62 ELECTRICAL CONTROL PORT

General Specification: ISO 8015, JED-334-1, Size ISO 14405 LP						
Further Technical Data:						
Doc. Code:			Sheet:		To	
General Tolerances JED-261						
		Range of nominal dimensions in mm				
Class 1)		≤ 50	> 50 ≤ 180	> 180 ≤ 400	> 400	
Fine		±0.5	±1	±1.5	±2	
Medium	X	±1	±2	±3	±4	±3°
Coarse		±2	±3.5	±5	±6.5	
Tapped Holes acc.						
1) Tolerance Class Applied Crossmarked						

Copyright ZF®

Date	Signature
Drawn 2024-10-28	Owiakalski
Checked 2024-10-29	Sievers

Dimensions in mm

TWO-POSITION CYLINDER

Mass	Scale	Material No.	Date of first issue: 2016-04-26
2.7 kg	1:1 (2:1)	421 351 070 0	Doc.-Code 005 / Language EN / Sheet 1/1
Size A 1	CAD System CREO	ECN-No. 516091 / Revision 8 x N / Techn. Resp. 6463	Replacement for -

100mm

Non è permesso consegnare o farci o riprodurre questo documento, né utilizzare il contenuto o renderlo comunque noto a terzi senza autorizzazione della Zf Friedrichshafen AG. Tutti i diritti derivanti da brevetti o modelli.
È fatta riserva di tutti i diritti derivanti da brevetti o modelli.

Copying of this document and giving it to others and the use or communication of the contents thereof, are forbidden without express authority. Offenders are liable to the payment of damages. All rights are reserved in the event of the grant of patent or registration of a utility model or design. This document is the subject of copyright.

Toute Communication ou reproduction de ce document, toute exploitation ou communication de son contenu sont interdites, sauf autorisation écrite. Tous droits de propriété industrielle réservés, notamment en matière de brevets et de modèles.

Weitergabe sowie Vervielfältigung dieser Unterlage, Verwertung und Mitteilung ihres Inhalts nicht gestattet, soweit nicht ausdrücklich zugestanden. Zuwiderhandlungen verpflichten zu Schadensersatz. Alle Rechte für den Fall der Patenterteilung oder Gebrauchsmustereintragung vorbehalten.