◇ SAFETY CHARACTERISTICS	0
◇ SIGNIFICANT CHARACTERISTICS	6
<CI> CUSTOMER INTERFACE	19

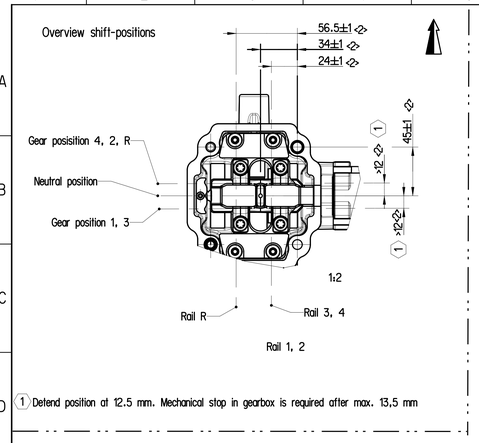

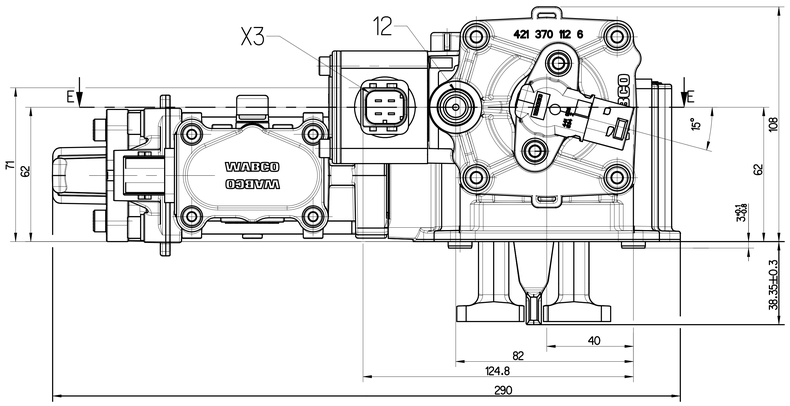

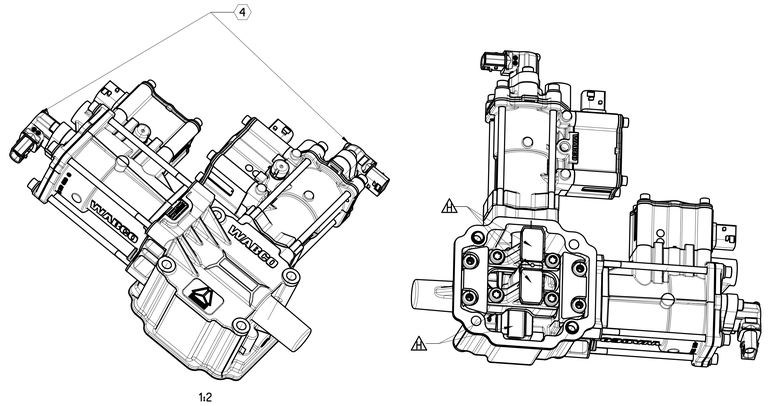

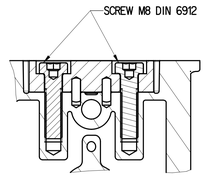

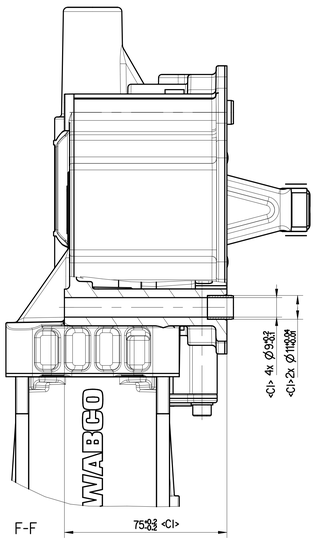

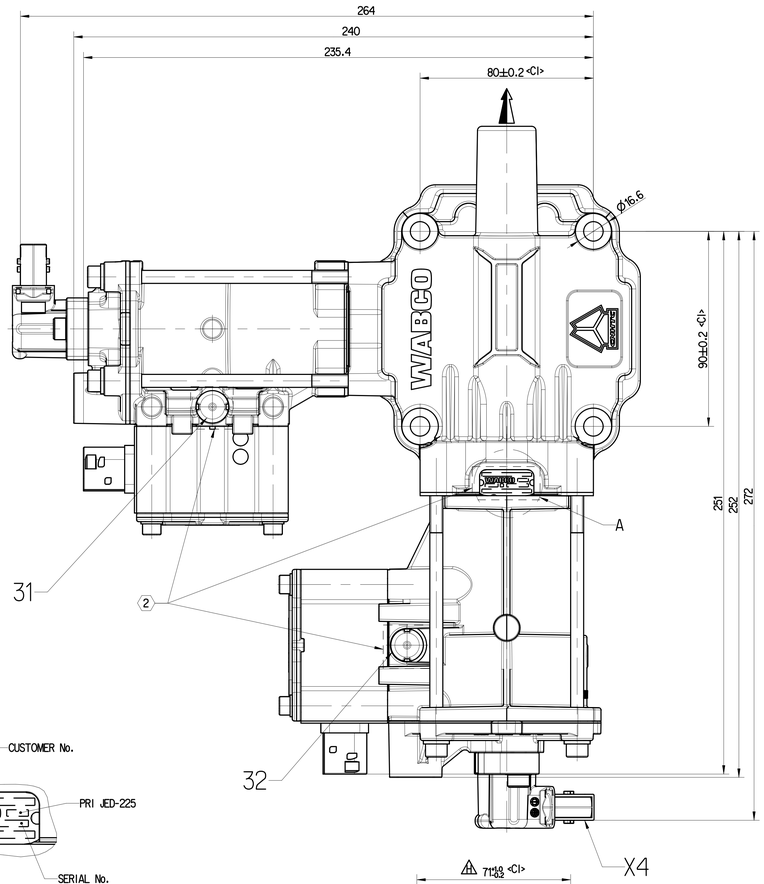

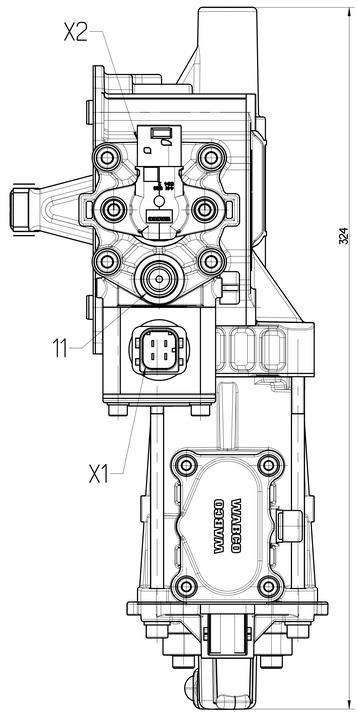

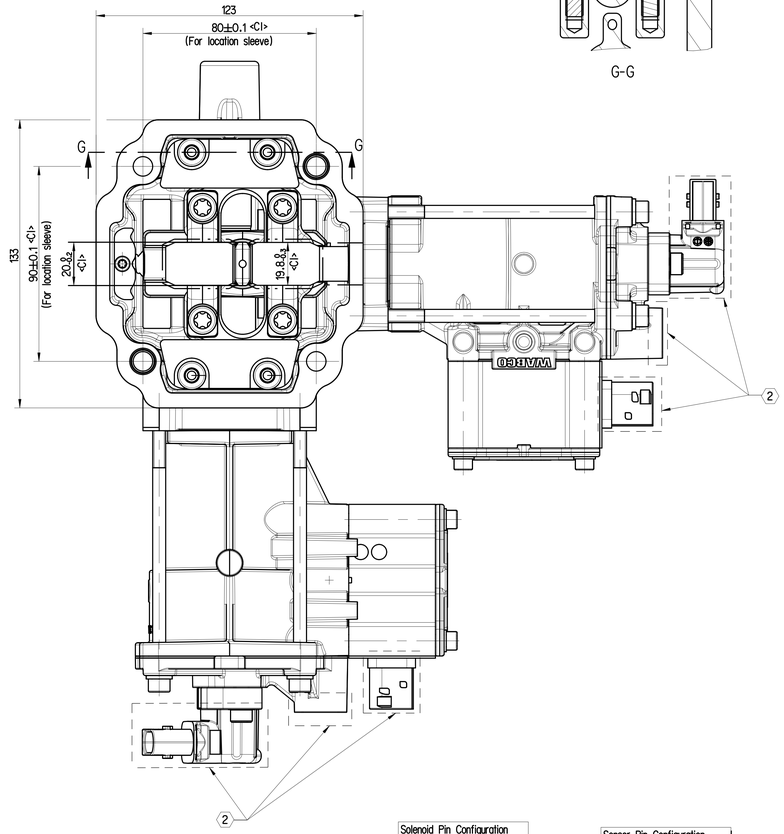

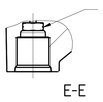

Rubber part is not needed inside this step (Ø 9.5).

E-E

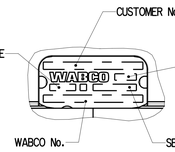

A
2:1

Assembly requirements

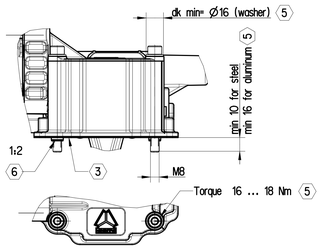

3 Requirements on surface of counterpart: ▱0.1 ; Ra 12.5

4 Fixation of wire harness 150 mm behind connectors required
Connectors do not have a protection against external Forces (eg. Footstep)

5 Does not substitute screw calculation by customer

6 Counter part dimensions recommendation
Ø11 +0.05/+0.2, Depth : min3.2 mm

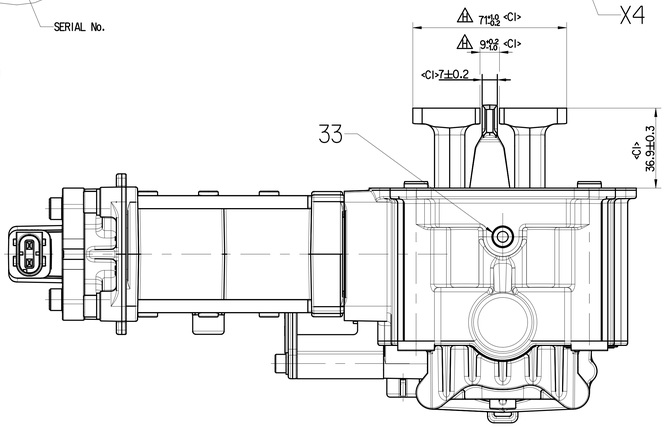

11	Supply selection cylinder M16x1.5 JED388-0 (VOSS-230)	<CI>
12	Supply gearshift cylinder M16x1.5 JED388-0 (VOSS-230)	<CI>
X1	Connector Solenoid Valves selection (VSE1, VSE2) according to WABCO interface drawing 858 000 852 4	<CI>
X2	Connector distance sensor selection (DSSE) according to WABCO interface drawing 858 000 853 4	<CI>
X3	Connector Solenoid Valves gearshift (VG1, VG2) according to WABCO interface drawing 858 000 852 4	<CI>
X4	Connector distance sensor gearshift (DSG) according to WABCO interface drawing 858 000 853 4	<CI>
31 / 32	Exhaust (not protectoed against external Forces (e.g. Footstep)	
33	Gearbox exhaust thread 1/8'' NPT (Has to be closed with an exhaust protector to avoid leakage and intrusion of dust and water)	

Ports 11 and 12 will be protected with Protection plug 898 011 400 4 during transportation

WORKING PRESSURE : Pe = 6 ... 8,5 bar

WORKING MEDIUM : AIR (PERMISSABLE CONTAMINATION SEE PRODUCT SPECIFICATION)

OVERPRESSURE INSIDE GEARBOX : MAX. 0.1 bar

VOLTAGE : 24^{+8}_{-4} V DC

THERMAL RANGE OF APPLICATION : -25°... +120°

DEGREE OF PROTECTION : IP 6K9K (ISO 20653)

FORWARD DRIVING DIRECTION :

FURTHER INFORMATION SEE PRODUCT SPECIFICATION

2 NO PAINT ALLOWED (Box Marked)

Solenoid Pin Configuration

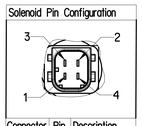

Connector	Pin	Description
X1	1	not used
	2	VSE1
	3	VSE2
	4	VGGND1
X3	1	not used
	2	VG1
	3	VG2
	4	VGGND1

Sensor Pin Configuration

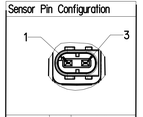

Connector	Pin	Description
X2	1	DSSE
	2	not used
	3	DSGND
X4	1	DSG
	2	not used
	3	DSGND

General Specifications ISO 8015, JED-334-1, Size ISO 14405 LP			Copyright ZF*		
Further Technical Data:421 370 000 0			Date	Drawn	Signature
Doc. Code:035		Sheets 1 To 12	2025-05-07	Li Lei	
General Tolerances JED-261			Checked		
	Range of nominal dimensions in mm		2025-05-15	Pramkumar	
Class	11	≤ 50 / > 50 ≤ 180 / > 180 ≤ 400 / > 400	Dimensions in mm		
Fine		±0.5 / ±1 / ±1.5 / ±2			
Medium	X	±1 / ±2 / ±3 / ±4			
Coarse		±2 / ±3.5 / ±5 / ±6.5			
Tapped Holes acc. JED-152					
11 Tolerance Class Applied Crossmarked					

Copyright ZF* — Gearbox actuator

Mass	Scale	Material No.	Date of first issue: 2008-09-05
6.399 kg	1:1 (1:2,2:1)	421 370 000 0	Doc.Code: 005 / Language: EN / Sheet: 1/1
Size: A 0	CAD System: CREO	EDN No.: 509924 / Revision: 5x H / Techn. Regs.: 6462	Replacement for: -

100mm

Tous Commentaires ou reproduction de ce document, toute exploitation ou communication de son contenu non autorisée, sont interdits. Les contrefacteurs seront tenus responsables. Tous droits réservés, notamment en cas de dépôt de brevet, de modèle de utilité ou de dessin et modèle.
Weitergabe sowie Vervielfältigung dieser Unterlage, Verwertung und Mitteilung ihres Inhalts nicht gestattet, soweit nicht ausdrücklich zugelassen. Zuwiderhandlungen verpflichten zu Schadenersatz. Alle Rechte vorbehalten, insbesondere für den Fall der Patenterteilung oder Eintragung von Gebrauchsmuster oder Geschmacksmuster.
Copying of this document and giving it to others and the use or communication of the contents thereof are forbidden without express authority. Offenders are liable to the payment of damages. All rights are reserved in the event of the grant of a patent or registration of a utility model or design.
Ceci ne peut être reproduit ni communiqué à tiers ou utilisé pour d'autres fins sans notre consentement écrit. Les contrefacteurs seront tenus responsables. Tous droits réservés, notamment en cas de dépôt de brevet, de modèle de utilité ou de dessin et modèle.
Questa copia non può essere riprodotta, comunicata o usata per altri scopi senza nostro consenso scritto. Gli autori di violazioni sono tenuti al risarcimento dei danni. Tutti i diritti sono riservati, in particolare in caso di rilascio di brevetto, di modello di utilità o di disegno o modello ornamentale.
Esta copia no puede ser reproducida, comunicada o usada para otros fines sin nuestro consentimiento escrito. Los infractores están obligados a pagar daños y perjuicios. Reservado todo derecho, en particular para el caso de concesión de patente o de registro de un modelo de utilidad o de diseño.
Não é permitido comunicar a terceiros ou utilizar outros fins este documento, sem autorização por escrito. Os infratores ficam obrigados a indemnizar. Todos os direitos reservados, em particular no caso de concessão de uma patente ou de registo de um modelo de utilidade ou de um desenho ou modelo.