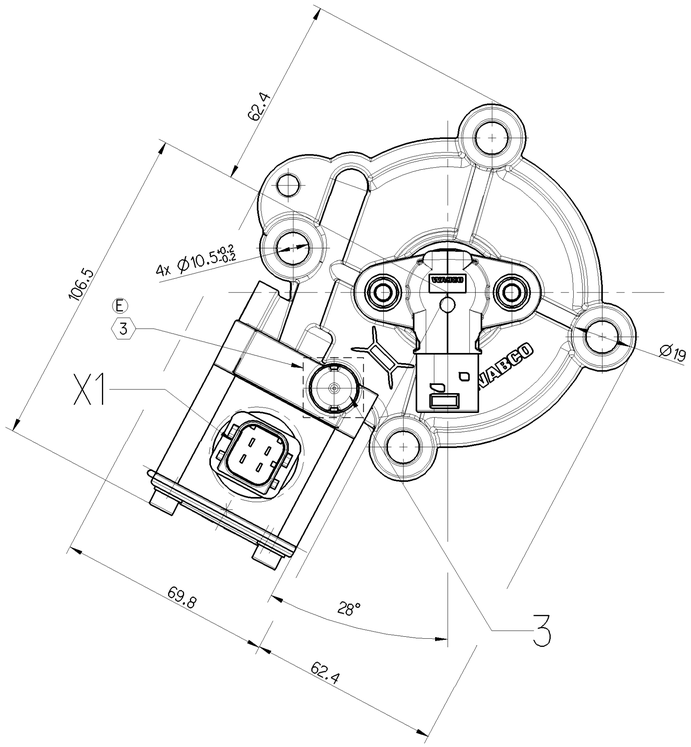


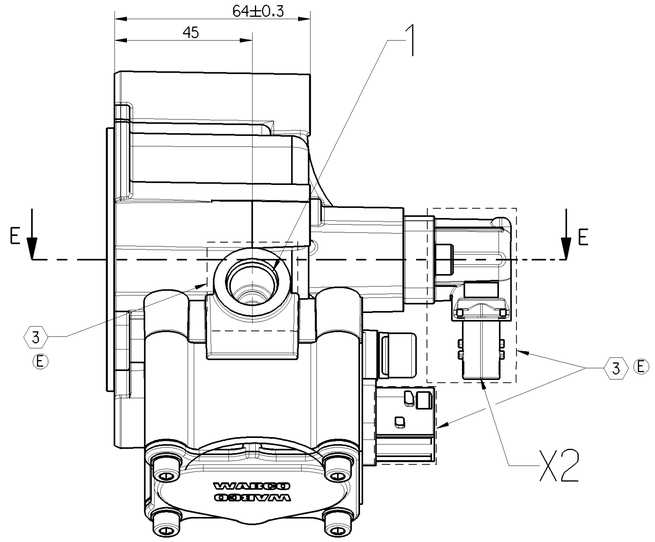


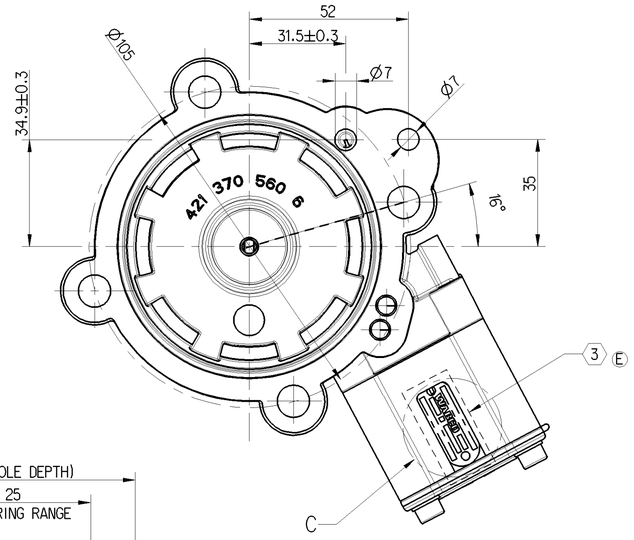


ASSEMBLY REQUIREMENTS

\# M10x1.5
TORQUE: 40 ... 46 NM

## $l_{MIN}$ = 22 MM (AL-COUNTERPART)
$l_{MIN}$ = 12 MM (ST-COUNTERPART)

### $dk_{MIN}$ = 18 MM

ATTENTION: A SCREW-CALCULATION WITH THE ASSEMBLY-CONDITIONS OF THE CUSTOMER IS NECESSARY IN ANY CASE! THE GIVEN VALUES ARE ONLY GUIDE VALUES!

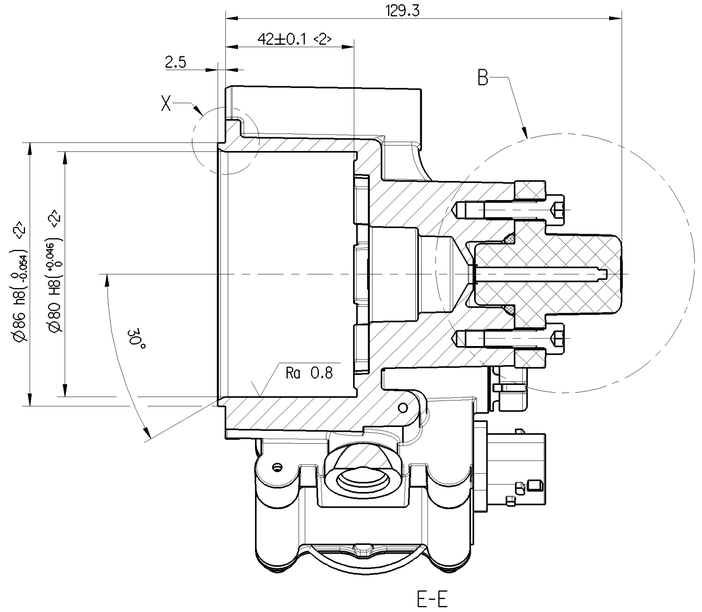


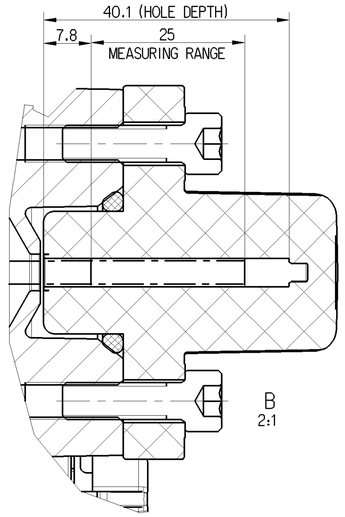


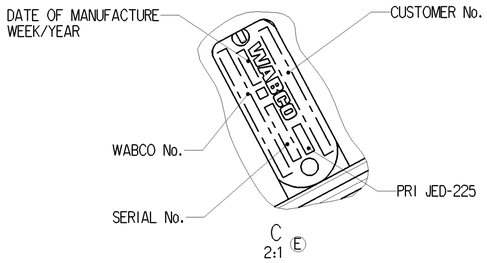


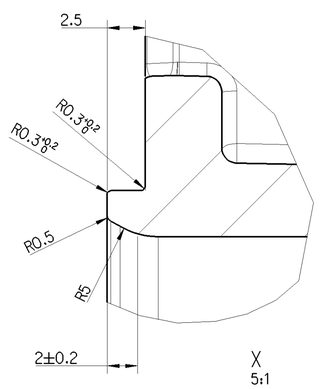


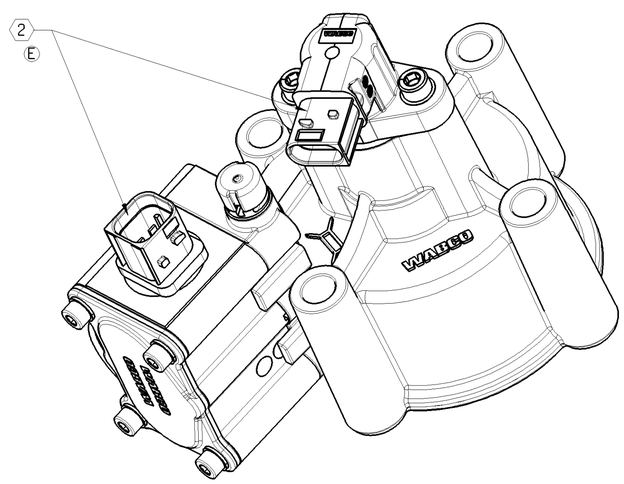


1 REQUIREMENTS ON SURFACE OF COUNTERPART:

⏥ 0.1 Ra 12.5

2 FIXATION OF WIRE HARNESS 150 mm BEHIND CONNECTORS REQUIRED
CONNECTORS DO NOT HAVE A PROTECTION
AGAINST EXTERNAL FORCES (eg. FOOTSTEP)

Solenoid Pin Configuration

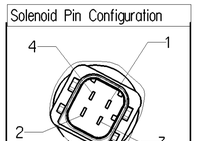


| Connector | Pin | Description |
|---|---|---|
| X1 | 1 | not used |
| | 2 | VR1 |
| | 3 | VR2 |
| | 4 | VGGND1 |

Sensor Pin Configuration

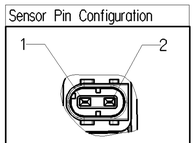


| Connector | Pin | Description |
|---|---|---|
| X2 | 1 | DSR |
| | 2 | DSGND |

TECHNICAL DATA

WORKING MEDIUM: AIR (PERMISSABLE CONTAMINATION SEE JED-848)

THERMAL RANGE OF APPLICATION : -30°....+120°

WORKING PRESSURE (SUPPLY): Pe = 5,5....8 bar

VOLTAGE: $24^{+8}_{-4}$ V DC

RELATIVE DUTY CYCLE: ~25%

DEGREE OF PROTECTION: IP 6K9K (ISO 20653)

FURTHER INFORMATION SEE PRODUCT SPECIFICATION

3x <2> Significant characteristic

3 NO PAINT ALLOWED (Box Marked) E

| | |
|---|---|
| 1 | Air supply M16x1.5<br>(JED388-0 VOSS 230 NG8; WABCO-No. 893 226 684 2)<br>Port will be protected with Protection plug 898 011 400 4 during transportation |
| 3 | Exhaust |
| X1 | Connector Solenoid Valves according WABCO interface drawing 858 000 852 4 |
| X2 | Connector distance sensor according WABCO interface drawing 858 000 853 4 |

General Specification: JED-334-1 , Size ISO 14405 LP
Further Technical Data:
Doc. Code: Sheet: To
General Tolerances JED-261

| Class 1) | Range of Nominal Dimensions ( ± mm) ≤ 50 | > 50 ≤ 180 | > 180 ≤ 400 | > 400 | ∡ |
|---|---|---|---|---|---|
| Fine | | 0.5 | 1.0 | 1.5 | 2.0 | |
| Medium | X | 1.0 | 2.0 | 3.0 | 4.0 | ±3° |
| Coarse | | 2.0 | 3.5 | 5.0 | 6.5 | |

Tapped Holes acc. JED-152
1) Tolerance Class Applied Crossmarked

Copyright WABCO®

| Date | Signature |
|---|---|
| Drawn 2016-02-25 | Gora |
| Checked 2016-03-04 | Kraft |
| Expert Schulz | |

WABCO

Two Position Cylinder

| Mass | Scale | Material No. | Date of first issue: 2008-09-09 |
|---|---|---|---|
| 1.3 KG | 1:1 (2:1, 5:1) | 421 370 020 0 | Doc.-Code 005 / Language EN / Sheet 1/1 |
| Size A 1 | CAD System CREO | ECN-No. 161874 / Revision 7x E / Techn. Resp. 6462 | Replacement for 884 011 990 0 |

100mm

Tutte Comunicazioni o riproduzione di questo documento, nonché utilizzo e comunicazione di suo contenuto sono interdetti, salvo autorizzazione. Tutti i diritti derivanti da brevetti o modelli d'utilità sono riservati. Non è permesso consegnare o fare o riprodurre questo documento, né utilizzare il contenuto o renderlo comunque noto a terzi senza autorizzazione. Tutti i diritti derivanti da brevetti o modelli d'utilità sono riservati.

Weitergabe sowie Vervielfältigung dieser Unterlage, Verwertung und Mitteilung ihres Inhalts nicht gestattet, soweit nicht ausdrücklich zugestanden. Zuwiderhandlungen verpflichten zu Schadensersatz. Alle Rechte für den Fall der Patent-, Gebrauchsmuster- oder Geschmacksmustereintragung vorbehalten.

Copying of this document and giving it to others and the use or communication of the contents thereof, are forbidden without express authority. Offenders are liable to the payment of damages. All rights are reserved in the event of the grant of patent or registration of a utility model or design. The document is the subject of copyright.

Este documento no puede ser copiado ni su contenido puesto en conocimiento de terceros sin autorización. Se reservan todos los derechos en caso de concesión de patente o registro de modelo de utilidad.

Ce document ne peut pas être reproduit ni son contenu porté à la connaissance de tiers sans autorisation. Tous droits de propriété industrielle réservés, notamment en matière de brevets et de modèles.