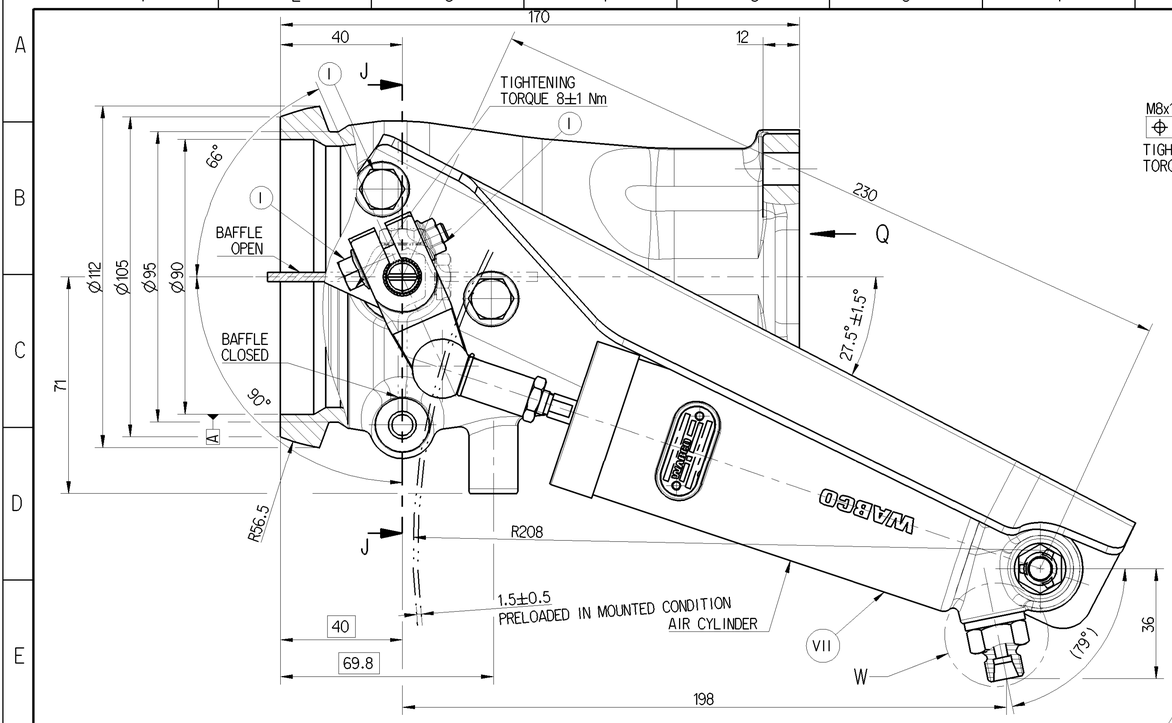

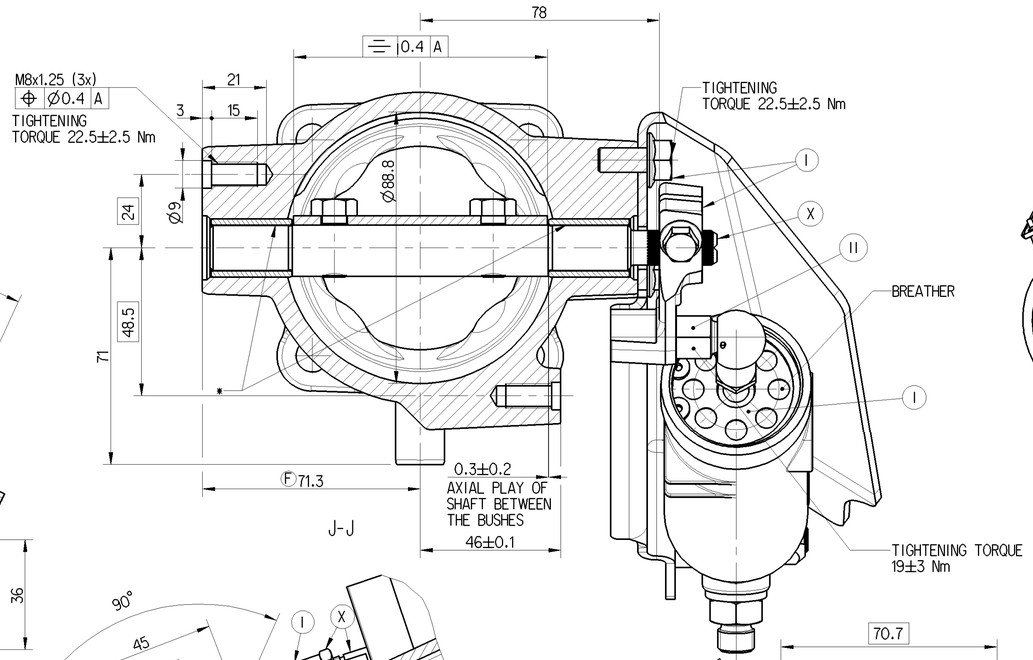

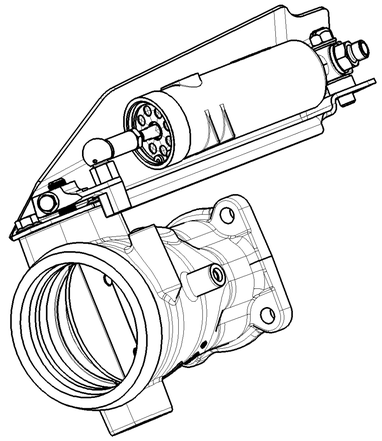

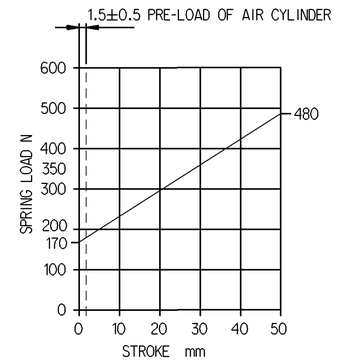

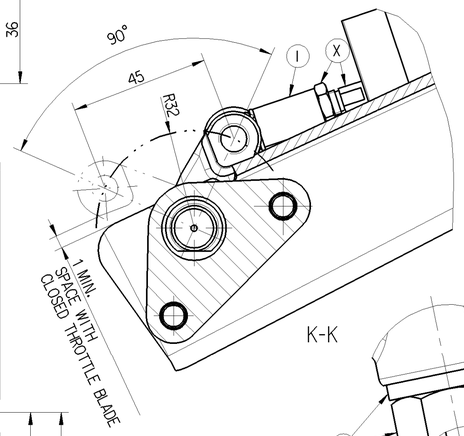

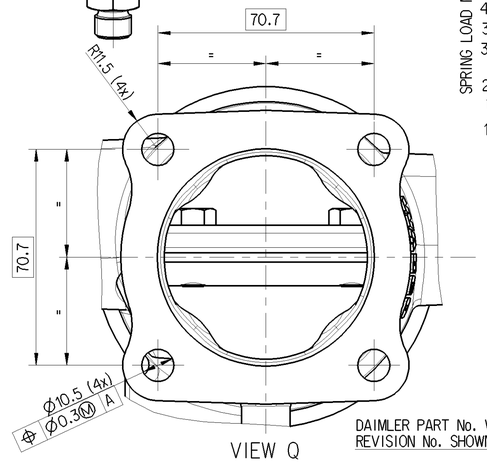

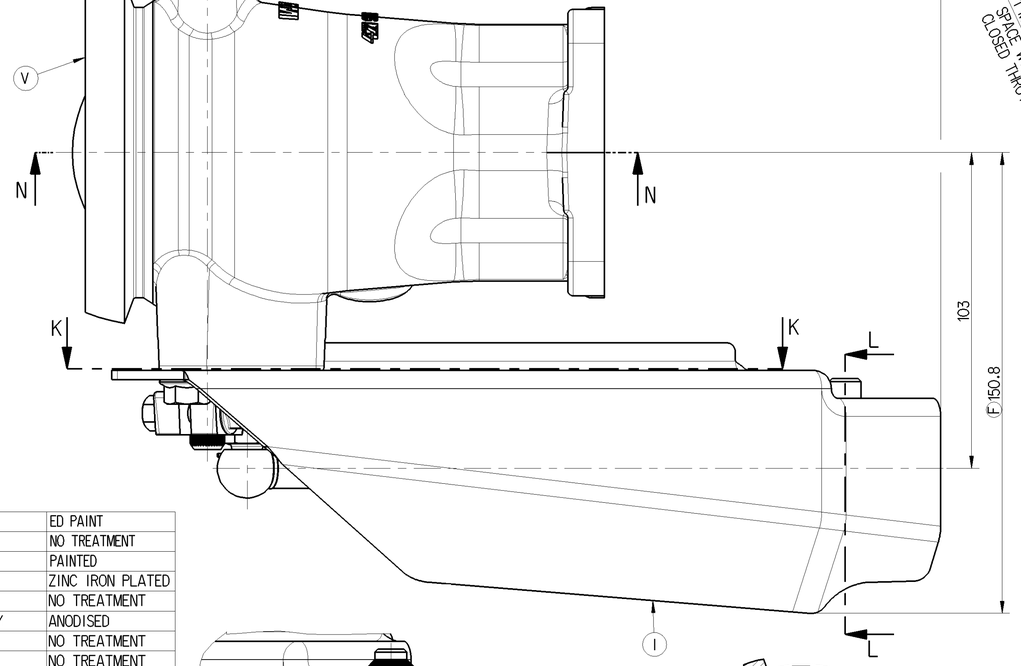

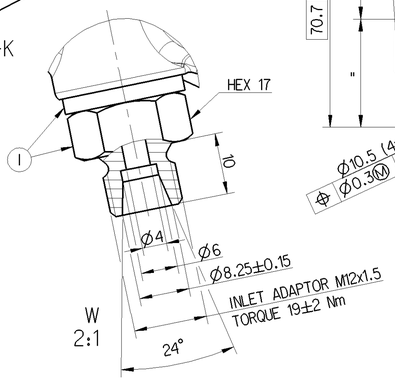

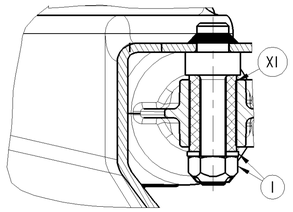

L-L

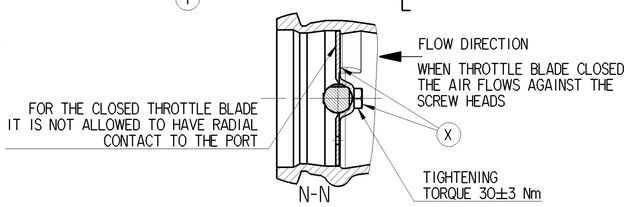

N-N
1:2
THROTTLE BLADE SHOWN IN
CLOSED POSITION

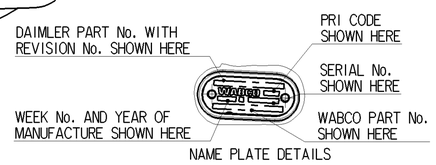

(F) DAIMLER PART No./REVISION No. | A 400 140 01 54/007

* LUBRICATED WITH HOT LUBRICATION PASTE "BERULUB VPN 13" OR EQUIVALENT

SI No.	NOTES	
1	PRODUCT SPECIFICATION No.	PS 4214290250
2	WORKING MEDIUM	AIR
3	NORMAL WORKING PRESSURE	8 bar
4	MAXIMUM WORKING PRESSURE	10 bar
5	THERMAL RANGE OF APPLICATION	-25°C TO +200°C
6	AIR CYLINDER BORE DIAMETER	40 mm
7	OPERATING STROKE	45 mm
8	SALT SPRAY TEST	96 HOURS AS PER ISO 9227
9	MALE THREAD IS FITTED WITH CLOSURE SLEEVE FOR STORAGE AND TRANSIT PURPOSES	
10	DURING INSTALLATION, ORIENT THE EXHAUST BRAKE ASSEMBLY IN SUCH A WAY THAT THE AIR CYLINDER IS IN THE INCLINED CONDITION AND THE BREATHER PORTION IS FACING DOWNWARDS TOWARDS THE GROUND	

PART CODE	MATERIAL	SURFACE PROTECTION
XVIII	STEEL	ED PAINT
XVII	STEEL	NO TREATMENT
XVI	CAST IRON	PAINTED
XV	STEEL	ZINC IRON PLATED
XIV	CAST IRON	NO TREATMENT
XIII	ZINC ALLOY	ANODISED
XII	PLASTIC	NO TREATMENT
XI	RUBBER	NO TREATMENT
X	STAINLESS STEEL	NO TREATMENT
IX	BRASS	NO TREATMENT
VIII	ZINC ALLOY	CHROMATED
VII	ALUMINIUM ALLOY	ANODISED
VI	ALUMINIUM ALLOY	CHROMATED
V	CAST IRON	PAINTED
IV	STEEL	POWDER COATED
III	STEEL	PAINTED
II	STEEL	PHOSPHATED
I	STEEL	ZINC PLATED

General Specification: JED-334-1 , Size ISO 14405 LP
Further Technical Data:
Doc. Code: Sheet: To
General Tolerances JED-261

Class 1)	Range of Nominal Dimensions (± mm) ≤ 50	> 50 ≤ 180	> 180 ≤ 400	> 400	∢
Fine	0.5	1.0	1.5	2.0	
Medium	1.0	2.0	3.0	4.0	±3°
Coarse	2.0	3.5	5.0	6.5	

Tapped Holes acc. JED-152
1) Tolerance Class Applied Crossmarked

Copyright WABCO®

	Date	Signature
Drawn	2015-07-10	Rengarajan
Checked	2015-07-10	Shivaraj
Expert	Yogesh	

WABCO

EXHAUST BRAKE ASSEMBLY

Mass	Scale	Material No.	Date of first issue: 2011-07-07
4.753 KG	1:1 (1:2)	421 429 025 0	Doc.Code: 005 · Language: EN · Sheet: 1/2
Size: A 1	CAD System: CREO	ECN-No.: 167720 · Revision: 3 F · Techn. Resp.: 5580_WIN	Replacement for: /

Toute Communication ou reproduction de ce document, toute exploitation ou communication de son contenu sont interdites, sauf autorisation expresse. Tout manquement à cette règle constitue un délit, sauf en cas d'erreur et ingénie dom tutour au versement de dommages et intérêts. Tous droits réservés, en cas de délivrance de brevet ou de dépôt de modèle d'utilité.

Weitergabe sowie Vervielfältigung dieser Unterlage, Verwertung und Mitteilung ihres Inhalts nicht gestattet, soweit nicht ausdrücklich zugestanden. Zuwiderhandlungen ziehen einen Schadenersatz nach sich. Alle Rechte für den Fall der Patenterteilung oder eingetragenen Gebrauchsmustereintragung vorbehalten.

Non è permesso consegnare o farci o riprodurre questo documento, né utilizzare il contenuto o renderlo comunque noto a terzi senza autorizzazione esplicita. Ogni infrazione costituisce un illecito, salvo in caso di errore, obbligo di risarcimento danni. Tutti i diritti riservati in caso di rilascio di brevetto o di registrazione di modello di utilità.

Copying of this document and giving it to others and the use or communication of the contents thereof, are forbidden without express authority. Offenders are liable to the payment of damages. All rights are reserved in the event of the grant of a patent or the registration of a utility model or design. The document is the subject of complai-

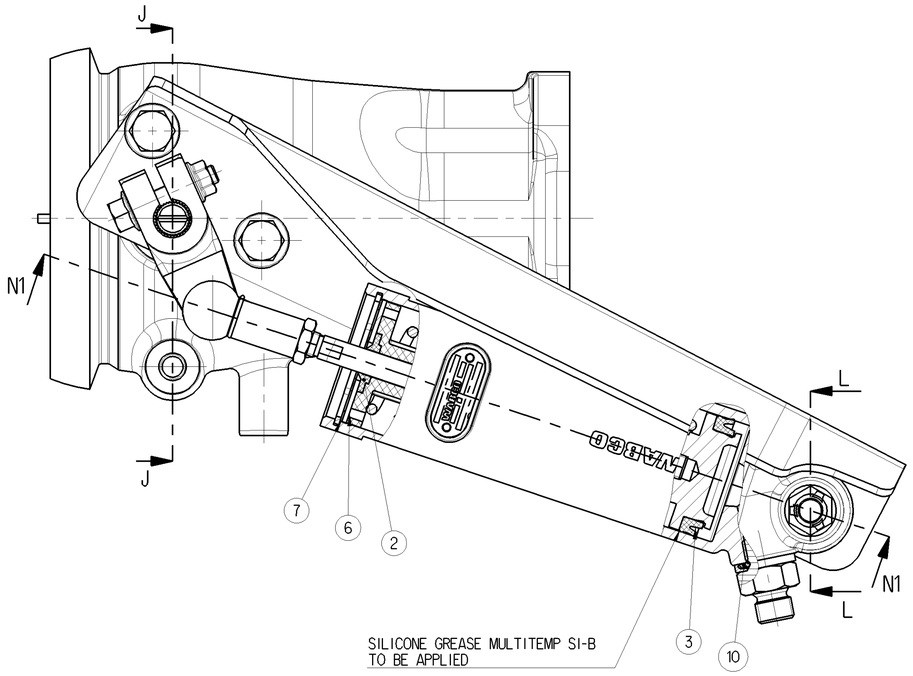

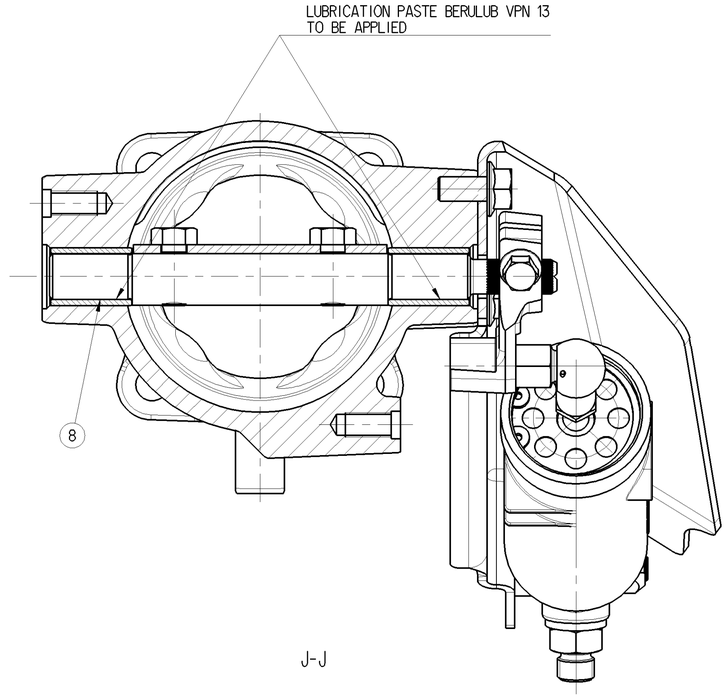

J-J

REPAIR KIT DETAILS 300025051 (MSP 25/51)				
Sl.No	DESCRIPTION	WABCO PART NUMBER	QUANTITY	DICV PART NUMBER
1	BUSH	4219052024	1	A4009920301
2	WIPER SEAL	8971500434	1	A4009972041
3	LIP SEAL	8971500444	1	A4009972141
4	LOCKING PIN	8924000014	1	A4009910012
5	LOCKING RING	8953400024	1	A4009920081
6	BREATHER	4214292234	1	A4009970952
7	STRAINER	4214292244	1	A4001420089
8	BUSH	4219052014	2	A4009920401
9	NUT M8x1.25	8919900444	1	A4009905050
10	SEALING RING	8979801014	1	A4009974045
11	LUBRICATION PASTE BERULUB VPN 13	8305030844	1	A4009890651
12	GREASE SACHET SILICONE GREASE MULTITEMP SI-B	8305030854	1	A4009890751

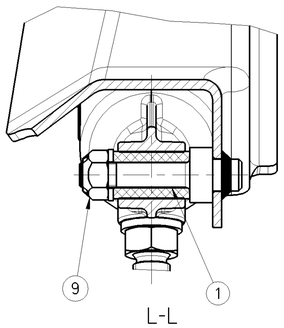

L-L

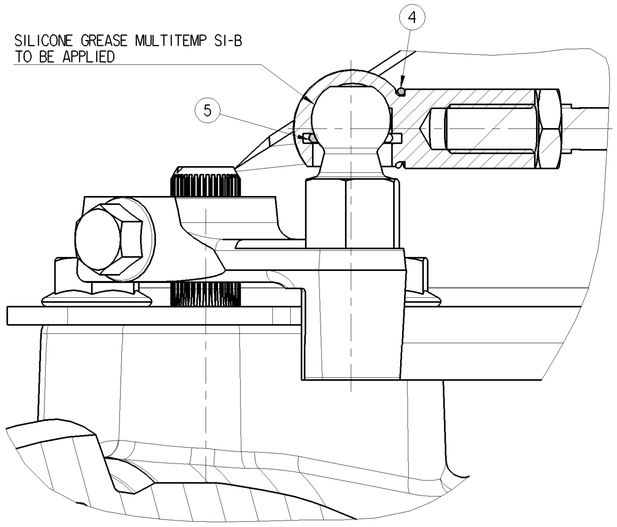

N1-N1
2:1

Tout Communication ou reproduction de ce document, toute exploitation ou communication de son contenu sont interdites, sauf autorisation expresse. Tout manquement à cette règle constitue un abus évident et expose son auteur au versement de dommages et intérêts sans préjudice des droits de propriété industrielle et intellectuelle.

Weitergabe sowie Vervielfältigung dieser Unterlage, Verwertung und Mitteilung ihres Inhalts nicht gestattet, soweit nicht ausdrücklich zugestanden. Zuwiderhandlungen stellen offensichtlich Mißbrauch dar und verpflichten zu Schadensersatz. Alle Rechte vor allem für Erteilung von Patent- oder Gebrauchsmusterschutz vorbehalten.

Non è permesso consegnare a terzi o riprodurre questo documento, né utilizzarne il contenuto o renderlo comunque noto a terzi prima dell'ottenuto consenso scritto. Ogni violazione costituisce evidente abuso e comporterà il rifiut cimento di danni subiti.

Copying of this document and giving it to others and the use or communication of the contents thereof, are forbidden without express authority. Contravention of this restriction will constitute an evident abuse and result in a liability to the payment of damages. All rights are reserved in the event of the grant of a patent or registration of a utility model or design. This document is subject to copyright.

General Specification: JED-334-1 , Size ISO 14405 LP					
Further Technical Data:					
Doc. Code:	Sheet:	To			
General Tolerances JED-261					
Range of Nominal Dimensions (± mm)					
Class 1)	≤ 50	> 50 ≤ 180	> 180 ≤ 400	> 400	
Fine	0.5	1.0	1.5	2.0	±3°
Medium	1.0	2.0	3.0	4.0	
Coarse	2.0	3.5	5.0	6.5	
Tapped Holes acc. JED-152					
1) Tolerance Class Applied Crossmarked					

Copyright WABCO®

Date	Signature	
Drawn		
2015-07-10	Rengarajan	
Checked		
2015-07-10	Shivaraj	
Expert		
Yogesh		

WABCO

EXHAUST BRAKE ASSEMBLY

Mass	Scale	Material No.	Date of first issue: 2011-07-07		
4.753 KG	1:1 (2:1)	421 429 025 0	Doc.Code 005	Language EN	Sheet 2/2
Size A 1	CAD System CREO	ECN-No. 167720 / Revision 3 F / Techn. Resp. 5580_WIN	Replacement for /		

100mm