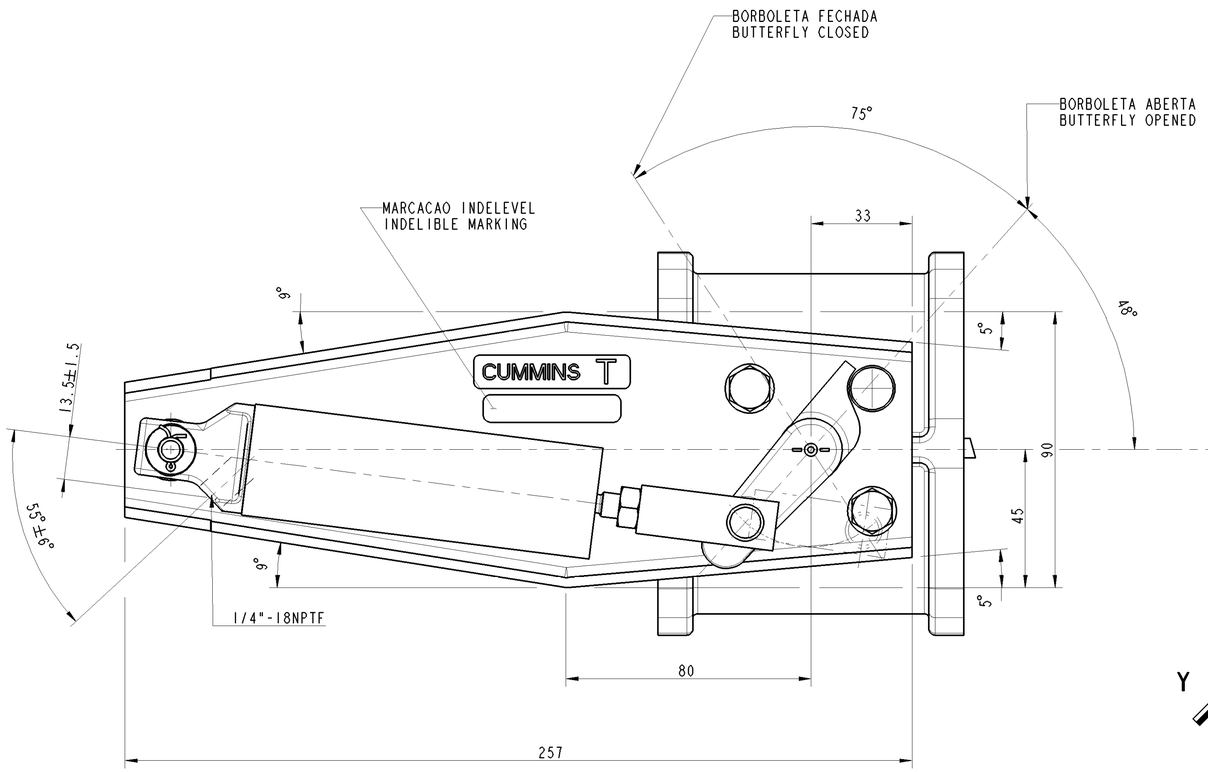

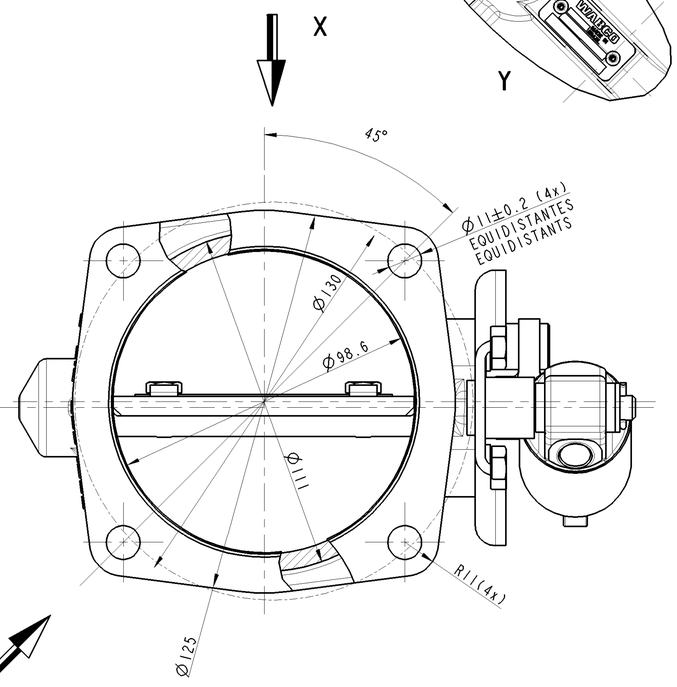

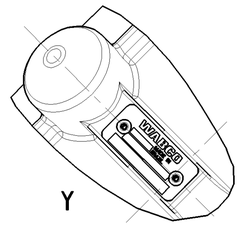

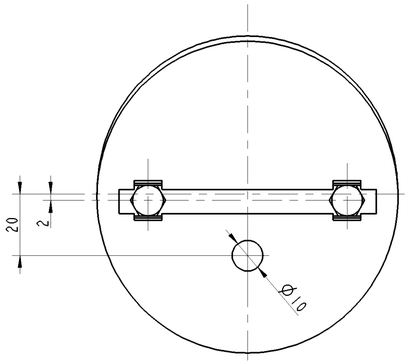

X

DETALHE DA BORBOLETA
BUTTERFLY DETAIL

PRESSAO DE TRABALHO DO CILINDRO
WORKING PRESSURE OF CYLINDER : 10 bar MAX.

CAMPO TERMICO DE APLICACAO
THERMAL RANGE OF APPLICATION : -40°C...+120°C

MEIO : AR
MEDIUM : AIR

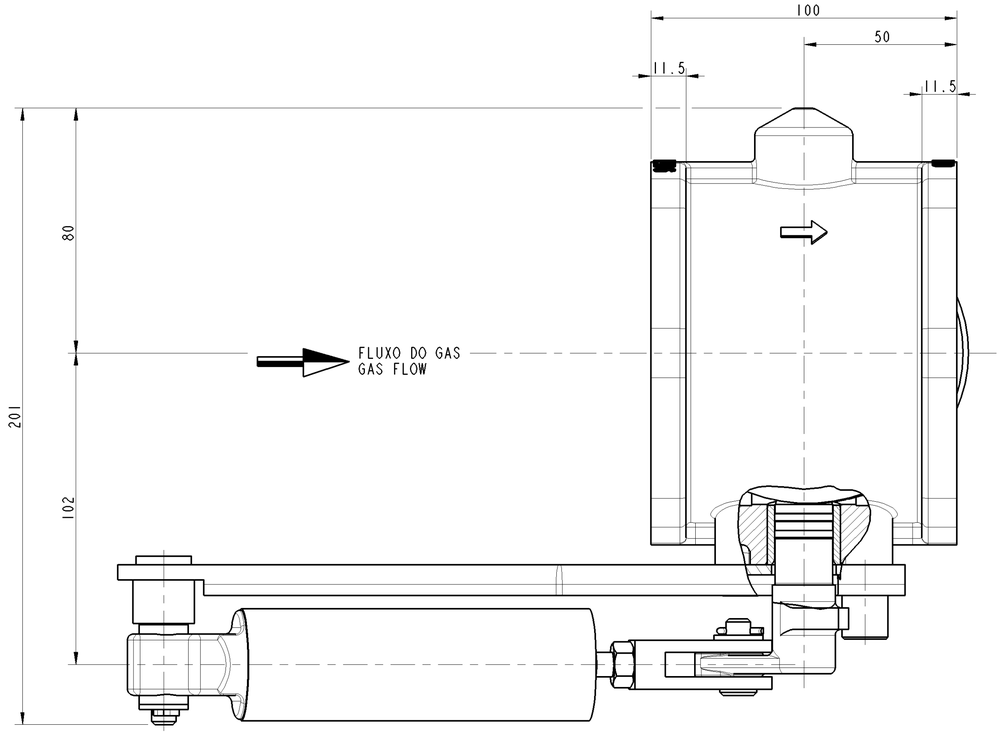

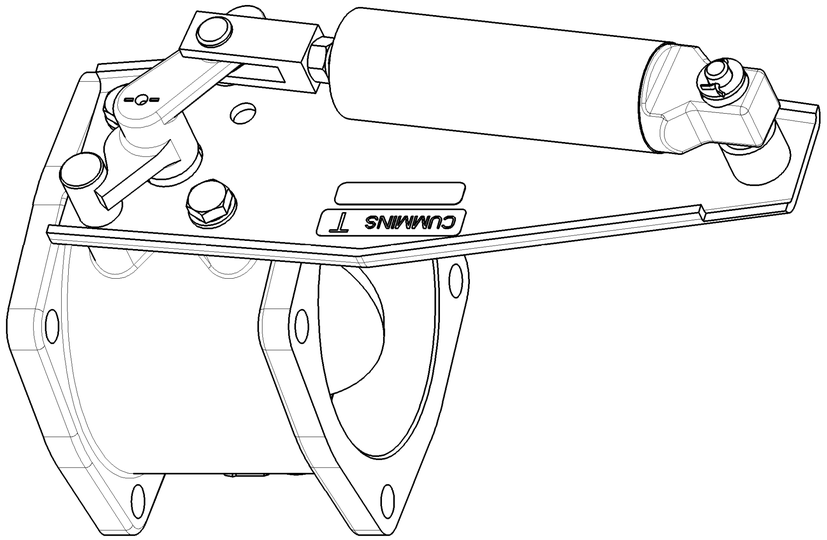

General Specification: JED-334-1 , Size ISO 14405 LP						
Further Technical Data:						
Doc. Code:			Sheet:		To	
General Tolerances JED-261						
	Range of Nominal Dimensions (± mm)					
Class 1)		≤ 50	> 50 ≤ 180	> 180 ≤ 400	> 400	
Fine		0.5	1.0	1.5	2.0	±3°
Medium	X	1.0	2.0	3.0	4.0	
Coarse		2.0	3.5	5.0	6.5	
Tapped Holes acc.						
1) Tolerance Class Applied Crossmarked						

Copyright WABCO®

Date	Signature
Drawn	
2016-11-23	Oliveira
Checked	
2016-11-25	Pinto
Expert	
Shivaraj	

WABCO

EXHAUST BRAKE
FREIO MOTOR

Mass	Scale	Material No.	Date of first issue:		
4.012 KG	1 : 1	421 429 135 0	Doc.Code	Language	Sheet
			005	ML	1/1
Size	CAD System				
A 1	CREO				

ECN-No.	Revision	Techn. Resp.	Replacement for
-	- -	5580	884 503 753 0 OF 04-12-07

100mm

Toute Communication ou reproduction de ce document, toute exploitation ou communication de son contenu sont interdites, sauf autorisation écrite. Tous droits de propriété industrielle réservés, notamment en matière de brevets et de modèles.

Weitergabe sowie Vervielfältigung dieser Unterlage, Verwertung und Mitteilung ihres Inhalts nicht gestattet, soweit nicht ausdrücklich zugesichert. Gewerbliche Schutzrechte vorbehalten, insbesondere Patent- und Gebrauchsmusterschutz.

Non è permesso consegnare a terzi o riprodurre questo documento, né utilizzare il contenuto o renderlo comunque noto a terzi senza autorizzazione scritta. Si riservano i diritti di proprietà industriale, in particolare quelli di brevetto o di modello.

Copying of this document and giving it to others and the use or communication of the contents thereof, are forbidden without express authority. Industrial property rights are reserved, in particular those of patent or registration of a utility model or design.

Aldo Reserva los derechos de propiedad industrial, especialmente los relativos a patentes y modelos de utilidad.

This document is the subject of copyright.