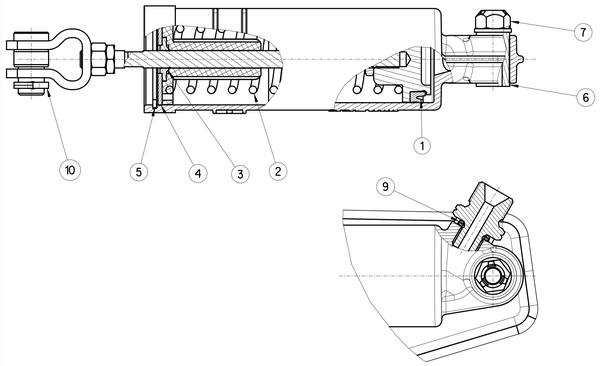

REPAIR KIT XXXXXXXXX (MSP XX/XX) CONSISTS OF ITEMS SHOWN			
S.NO	PART No.	DESCRIPTION	QTY
1	8971500444	LIP SEAL	1
2	8960701064	COMPRESSION SPRING	1
3	8971500434	WIPER SEAL	1
4	4214292234	BREATHER	1
5	4214293684	STRAINER	1
6	4219052024	BUSH	1
7	8915000654	PREVAILING TORQUE NUT	1
8	M939340	GREASE	1

THE FOLLOWING ARE INDIVIDUAL SERVICEABLE PARTS

9	8979801014	O-RING	1
10	8105110274	SPLIT PIN	1
EACH INDIVIDUAL SERVICEABLE PART REQUIRED IS MAXIMUM 1 IN QUANTITY			

SAFETY CHARACTERISTICS	0
SIGNIFICANT CHARACTERISTICS	1
<CI> CUSTOMER INTERFACE	5

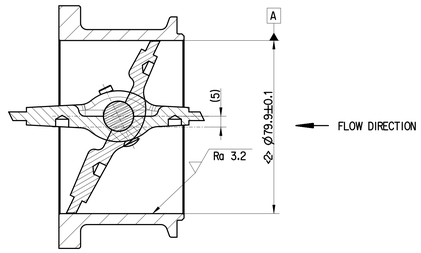

THROTTLE VALVE SHOWN IN CLOSED CONDITION

MM-MM

Sl No.	NOTES (FOR CUSTOMER REFERENCE ONLY)	
1	WORKING MEDIUM	AIR
2	NORMAL WORKING PRESSURE	9.5 bar
3	MAXIMUM WORKING PRESSURE	12 bar
4	AIR CYLINDER BORE DIAMETER	40 mm
5	STROKE	37 mm
6	THERMAL RANGE OF APPLICATION	-25°C TO +200°C
7	SALT SPARY TEST	300 HOURS AS PER ASTM B117 FOR ALL APPLICABLE PARTS EXCEPT HOUSING & FASTNERS 96 HOURS AS PER ASTM B117 FOR HOUSING & FASTNERS
8	OPEN PORT AND HOUSING ARE FITTED WITH CLOSURE SLEEVE AND CLOSURE COVERS RESPECTIVELY FOR STORAGE AND TRANSIT PURPOSES.	
9	DURING INSTALLATION, ORIENT THE EXHAUST ASSEMBLY IN SUCH A WAY THAT THE AIR CYLINDER IS IN THE INCLINED CONDITION AND THE BREATHER PORTION IS FACING DOWNWARS TOWARDS THE GROUND	
10	SERVICE LIFE TO FIRST OVERHAUL 2 YEARS/ 180000 km WHICHEVER IS EARLIER FOR AIR DRYER OR DDU FITTED VEHICLE. 1 YEAR/80000 km WHICHEVER IS EARLIER FOR NON AIR DRYER OR DDU FITTED VEHICLE.	
11	ACTUATING CYLINDER : MAX 10 CC/MIN PERMISSIBLE LEAKAGE	

EXTERNAL LEAKAGE TEST DONE FOR DATA GENERATION (FOR REFERENCE PURPOSE ONLY)

1) AT 1.5 BAR VALVE PRESSURIZED ON BAFFLE OPEN CONDITION, EXTERNAL LEAKAGE MEASURED.

MAXIMUM LEAKAGE : 85 LPM

2) AT 4 BAR VALVE PRESSURIZED ON BAFFLE CLOSED CONDITION, EXTERNAL LEAKAGE MEASURED.

MAXIMUM LEAKAGE : 120 LPM

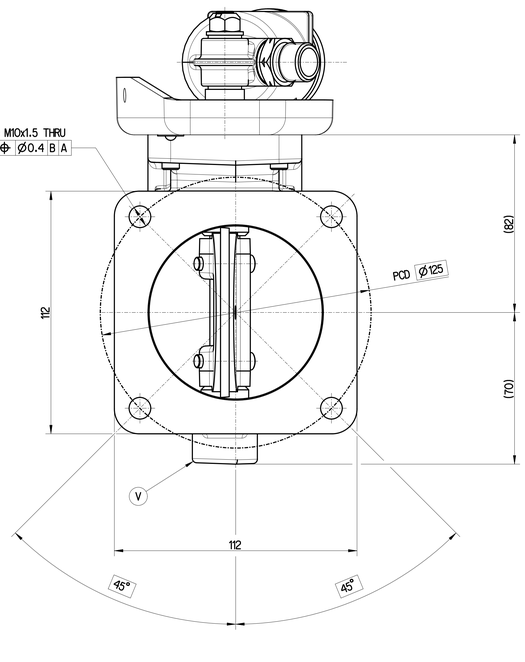

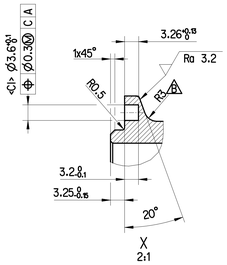

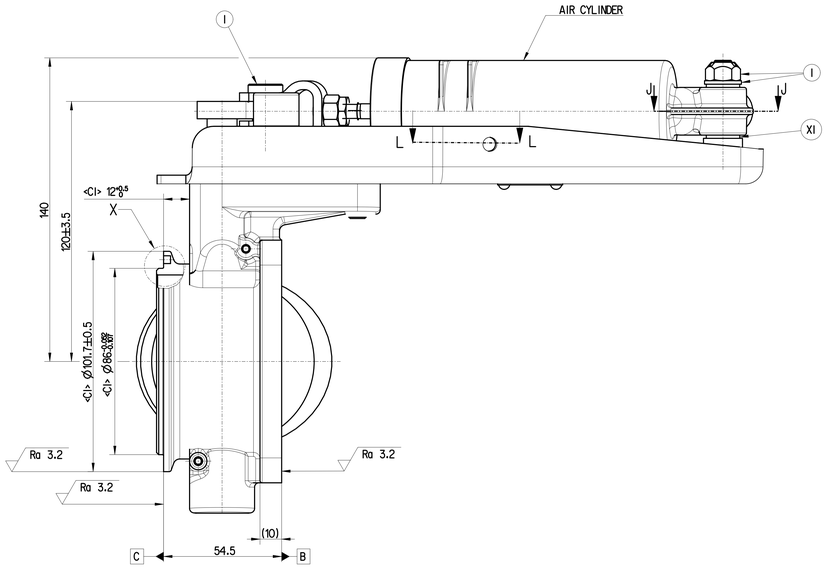

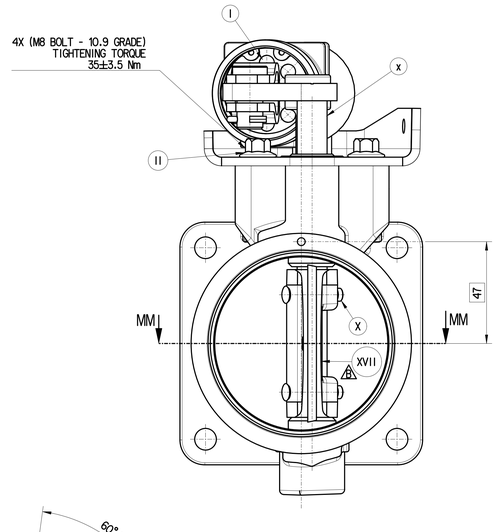

XVII	STEEL	NO TREATMENT
XVI	CAST IRON	PLATED
XV	STEEL	ZINC IRON PLATED
XIV	CAST IRON	NO TREATMENT
XIII	ZINC ALLOY	ANODISED
XII	PLASTIC	NO TREATMENT
XI	RUBBER	NO TREATMENT
X	STAINLESS STEEL	NO TREATMENT
IX	BRASS	NO TREATMENT
VIII	ZINC ALLOY	CHROMATED
VII	ALUMINIUM ALLOY	ANODISED
VI	ALUMINIUM ALLOY	CHROMATED
V	CAST IRON	PAINTED
IV	STEEL	ALUMINIUM FLAKE
III	STEEL	PAINTED
II	STEEL	PHOSPHATED
I	STEEL	ZINC PLATED
PART CODE	MATERIAL	SURFACE PROTECTION

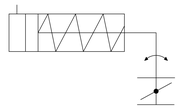

EBA PNEUMATIC CIRCUIT

NOTES (FOR CUSTOMER REFERENCE ONLY)

(A) ANGLE BETWEEN THE HOUSING BORE CENTER AND LEVER CENTER =55°(BAFFLE OPEN CONDITION)

(B) ANGLE BETWEEN LEVER CENTERS FOR BAFFLE OPEN AND CLOESD POSITION = 64°

(C) AIR CYLINDER STROKE = 37 mm

(D) OFFSET 5mm ADDED ON FLAP TO SUPPORT SELF - RETURNING OF FLAP IN CASE OF DISCONNECTION FROM ACTUATING CYLINDER

(E) NAME PLATE COLOR - BLUE

CUSTOMER PART NUMBER	FFC02500

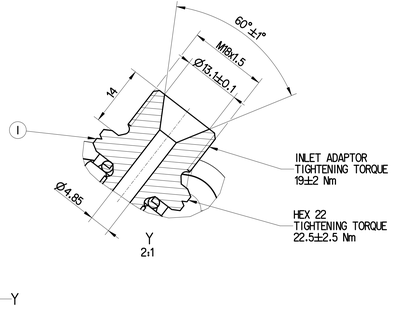

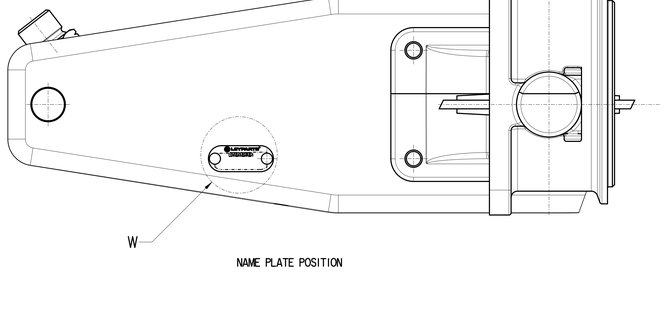

NAME PLATE POSITION

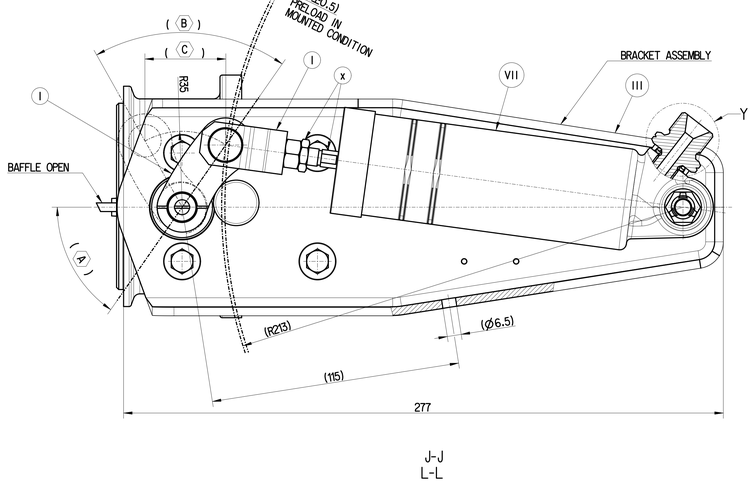

J-J
L-L

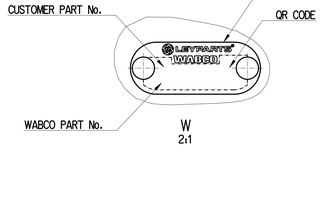

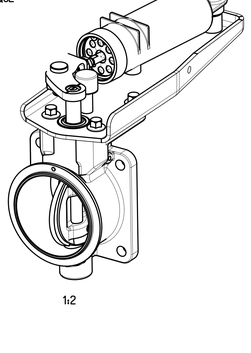

1:2

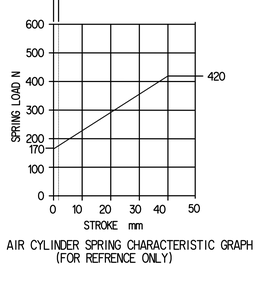

AIR CYLINDER SPRING CHARACTERISTIC GRAPH
(FOR REFRENCE ONLY)

General Specification: ISO 8015, JED-334-1, Size ISO 14405 LP							
Further Technical Data: 421 429 332 0							
Doc. Code: 035			Sheet: 1 To 5				
General Tolerances JED-261							
		Range of nominal dimensions in mm					
Class	11	> 50 ≤ 180	> 180 ≤ 400	> 400			
Fine		±0.5	±1	±1.5	±2		
Medium		±1	±2	±3	±4	±3°	
Coarse		±2	±3.5	±5	±6.5		
Tapped Holes acc. -							
11: Tolerance Class Applied Crossmarked							

Copyright WABCO®

Date	Signature
Drawn 2023-10-09	Pandian
Checked 2023-10-09	Sathish S

Dimensions in mm

WABCO

080 EXHAUST BRAKE ASSEMBLY

Mass	Scale	Material No.	Date of first issue	
4.4 kg	1:1 / 2:1	421 429 332 0	2019-09-27	
Size	CAD System		Doc.Code	Language	Sheet
A 0	CREO		005	EN	1/1

Order No.	Revision	Tools, Regs.	Replacement for
503341 2x	B	5980.WIN	894 061 474 0

Toda Reprodução ou reprodução de um documento, toda modificação ou comunicação de um conteúdo por terceiros, sem autorização expressa, é proibida e sujeita a indenização. Reservamo-nos direitos, inclusive em caso de concessão de uma patente, de formular pedido de registro de um desenho ou modelo de utilidade. Todo documento que nos pertence pode ser reclamado a qualquer momento e todos aqueles que o detiverem ou o tiverem em seu poder devem devolvê-lo sem demora, mediante nossa simples solicitação. Nos casos de concessão de patente ou registro de um desenho ou modelo de utilidade, a utilização do documento em questão deve ser restrita aos limites da licença concedida.

Ein jeder Nachdruck oder Reproduktion eines Dokuments, jede Änderung oder Mitteilung eines Inhalts durch Dritte, ohne unsere ausdrückliche Genehmigung, ist unzulässig und verpflichtet zu Schadensersatz. Wir behalten uns alle Rechte vor, einschließlich Patentrechte und eingetragene Gebrauchsmuster-Rechte. Alle Dokumente gehören uns und müssen auf unsere bloße Anfrage hin jederzeit zurückgegeben werden, wenn sie in Ihrem Besitz sind oder unter Ihrer Kontrolle stehen. Im Falle einer Lizenzvergabe darf die Verwendung dieses Dokuments nur innerhalb der Grenzen der erteilten Lizenz erfolgen.