SURFACE PROTECT./OBERFL. SCHUTZ	
I	JED-240-3
II	JED-256-1
III	JED-257
IV	RUBBER / PLASTIC
V	JED-240-2

63,5 H11 $^{+0.190}_{0}$

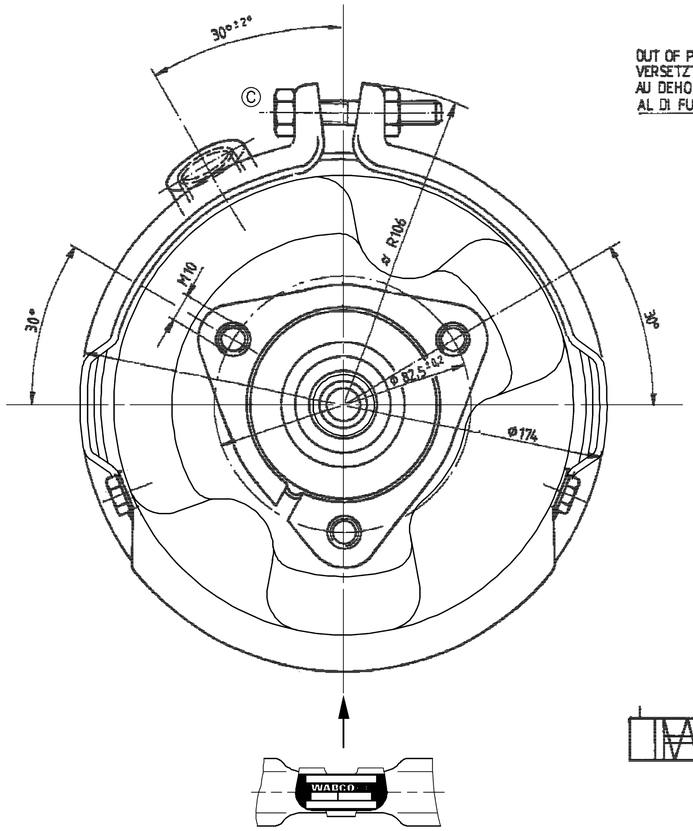

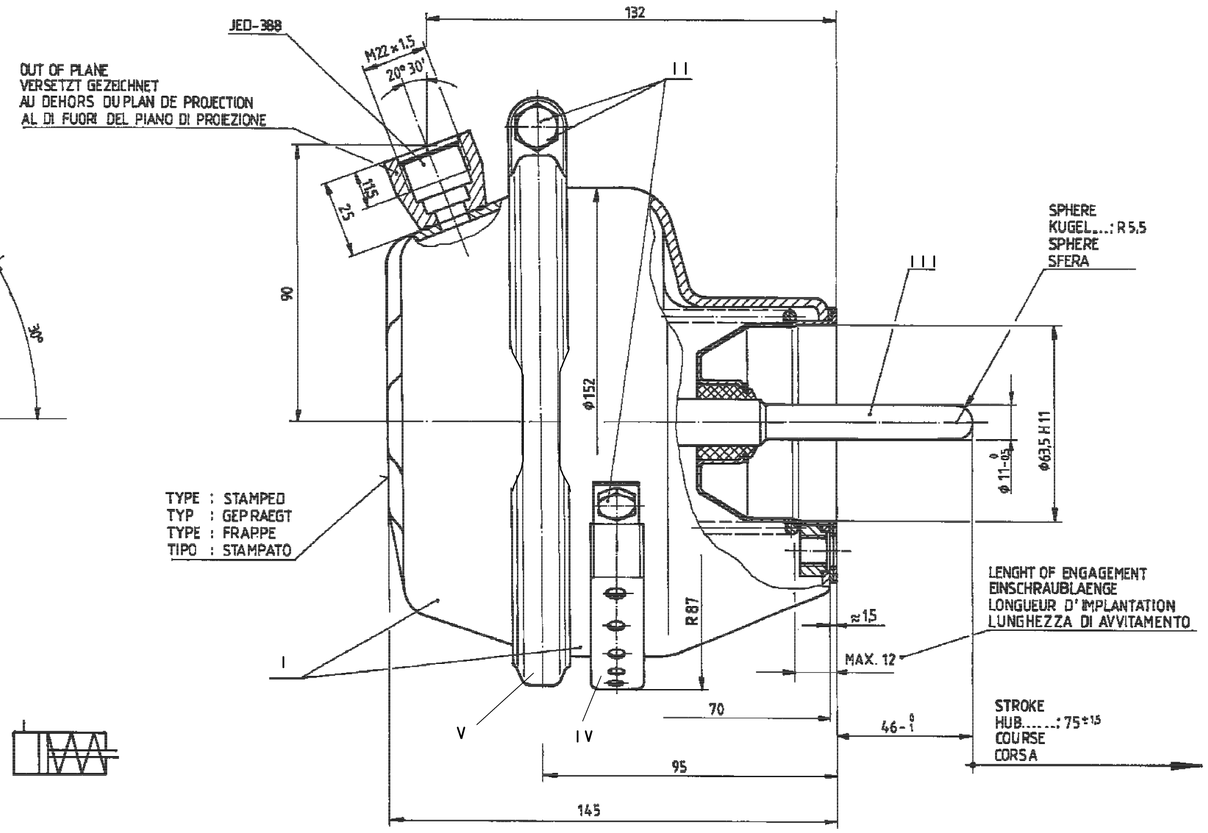

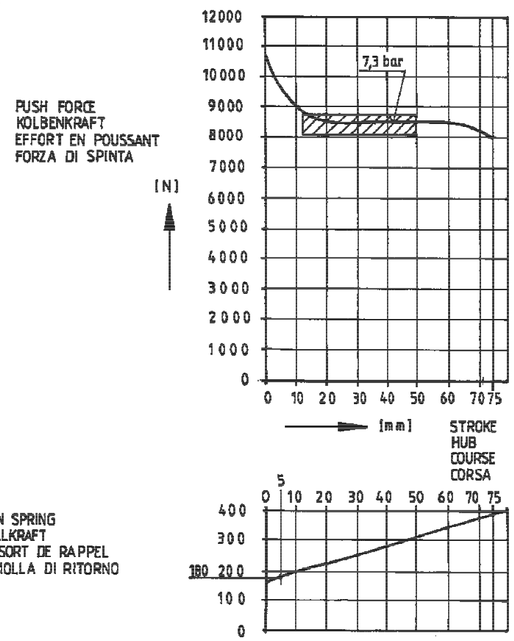

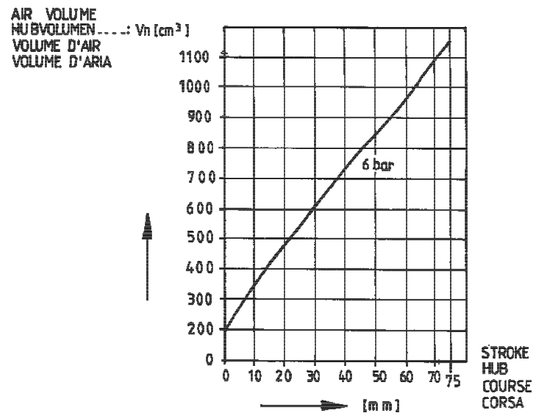

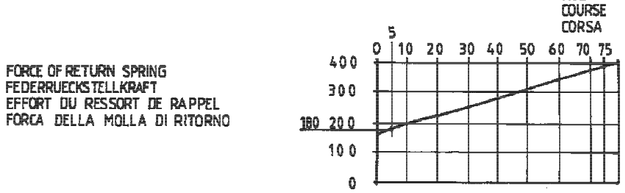

WORKING PRESSURE
BETRIEBSDRUCK.....: MAX. pe = 10 bar
PRESSION D'UTILISATION
PRESSIONE DI ESERCIZIO

THERMAL RANGE OF APPLICATION
THERMISCHER ANWENDUNGSBEREICH.....: -40°C BIS +80°C
GAMME D'APPLICATION THERMIQUE
CAMPO DI APPLICAZZIONE TERMICA

MEDIUM AIR
MEDIUM.....:LUFT
FLUIDE AIR
FLUIDO ARIA

INSTALLATION POSITION AS DRAWN
EINBAULAGE WIE GEZEICHNET
POSITION D'INSTALLATION SUIVANT DESSIN
POSIZIONE DI MONTAGGIO COME DISEGNATO

DEAD VOLUME
TOTVOLUMEN BEI 0 bar V_n = 72 cm³
VOLUME MORT
SPAZIO NOCIVO

Tous Communication ou reproduction de ce document, toute utilisation accomplie à son contenu sont interdites, sauf autorisation écrite. Tous droits de propriété intellectuelle réservés, notamment en matière de brevets ou de modèles d'utilité.

Rifiutarsi verrà Verteilerfolgung dieses Dokuments, Verwendung und Mitteilung ihres Inhalts nicht gestattet, soweit nicht ausdrücklich zugestanden. Gewerbliche Schutzrechte vorbehalten.

Una a presente consegna o farsi a riprodurre questo documento, ne utilizzare il contenuto e rendere comune altre a terzi senza esplicito consenso scritto. Tutti i diritti derivanti da brevetto o modello di utilità sono riservati.

Copying of this document and giving it to others and the use or communication of the contents thereof, are forbidden without express authority. Offenders are liable to the payment of damages. All rights are reserved in the event of the grant of a patent or registration of a utility model or design. (This document is the subject of copyright.)

General Specification: JED-334-B							
Further Technical Data:							
Doc. Code:			Sheet:		To		
General Tolerances JED-261							
	Range of Nominal Dimensions (± mm)						
Class 1)	≤ 50	> 50 ≤ 180	> 180 ≤ 400	> 400			
Fine		0.5	1.0	1.5	2.0		
Medium	><	1.0	2.0	3.0	4.0	±3°	
Coarse		2.0	3.5	5.0	6.5		
Tapped Holes acc. JED-388							
1) Tolerance Class Applied Crossmarked							

Copyright WABCO®

Date	Signature
Drawn 22-08-09	Gopinath
Checked 22-08-09	Senthilkumar
Expert	Senthilkumar

WABCO

BRAKE CHAMBER
MEMBRANZYLINDER 20
VASE A DIAPHRAGME
BRAKE CHAMBER

Mass	Scale	Material No.	Date of first issue: 91-10-25		
3_{Kg}^{2}	1:1	423 055 008 0	Doc.Code 005	Language ML	Sheet 1/1
Size A 1	CAD System CCD	ECN-No. 509029	Revision 1xC	Techn. Resp. 5430	Replacement for

100mm