SURFACE PROTECT./OBERFL. SCHUTZ	
I	JED-240-3
II	JED-256-1
III	JED-257
IV	RUBBER / PLASTIC
V	JED-240-2

63,5 H11 $^{+0.190}_{0}$

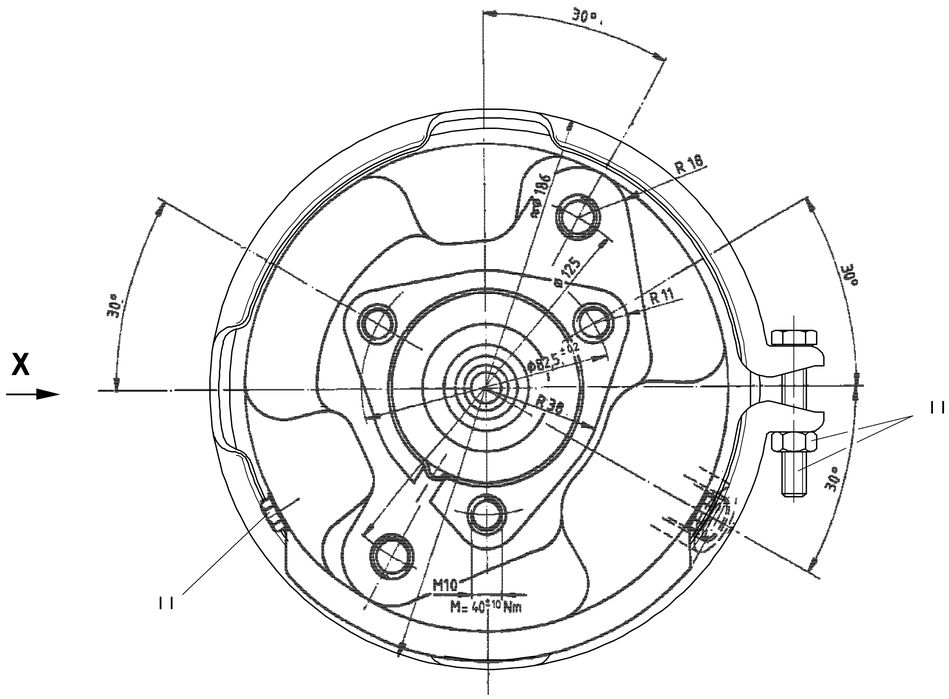

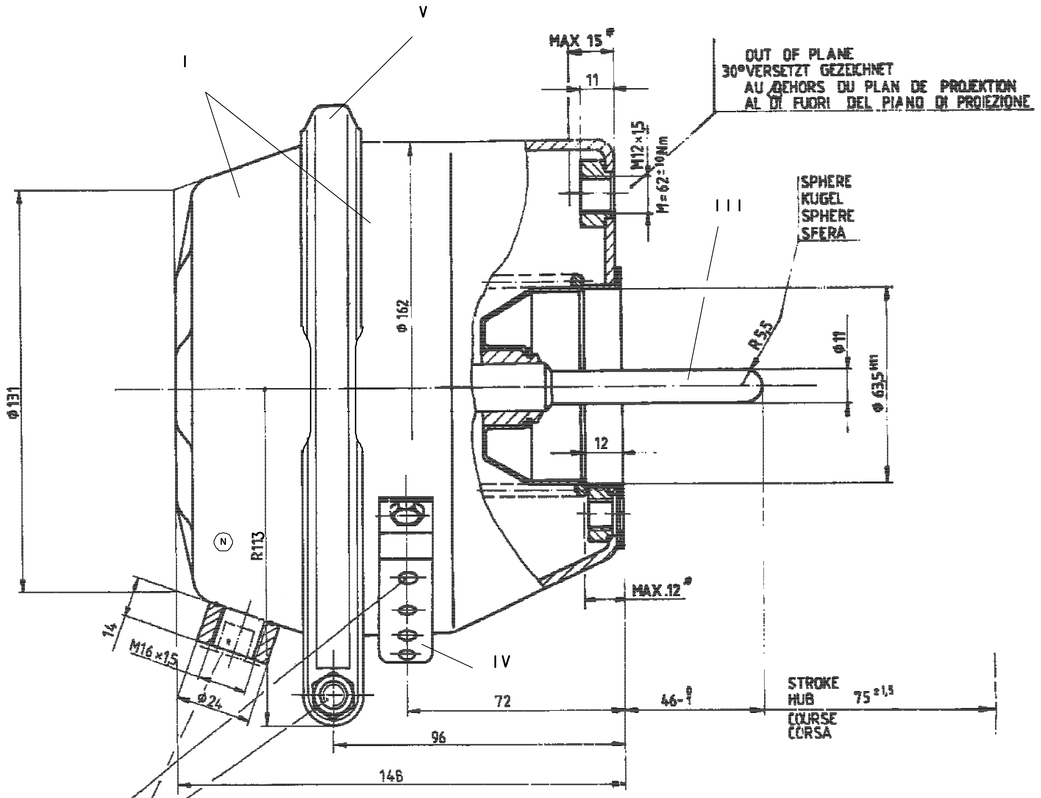

* LENGHT OF ENGAGEMENT
EINSCHRAUBLAENGE
LONGUEJR D'IMPLANTATION
LUNGHEZZA DI AVVITAMENTO

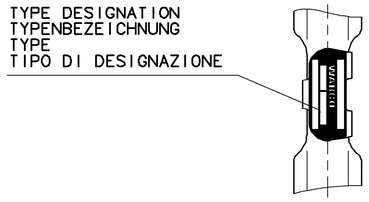

EXHAUST
ENTLUEFTUNG
ECHAPPEMENT
SCARICO

OUT OF PLANE
VERSETZT GEZEICHNET
AU DEHORS DU PLAN DE PROJECTION
AL DI FUORI DEL PIANO DI PROIEZIONE

PUSH FORCE OF BRAKE CHAMBER: SEE TECNICAL INFORMATION SHEET.....
KRAFTABGABE DES MEMBRANZYLINDERS SIEHE KONSTRUKTIONSBLATT..... 423 056 000 0 (997)
EFFORT DE POUSSEE DU VAS A DIAPHRAGME VOIR NOTICE TECHNIQUE.....
FORZA DI SPINTA DI BRAKE CHAMBER VEDERE FASCICOLO DESCRITTIVO.....

VOLUME-STROKE DIAGRAM SEE.....
HUBVOLUMENDIAGRAMM SIEHE ZEICHNUNG..... 423 056 001 0 (997)
DIAGRAMME VOLUME-COURSE VOIR.....
DIAGRAMMA VOLUME-CORSA VEDERE.....

WORKING PRESSURE.....
BETRIEBSDRUCK..... MAX p_e 10 bar
PRESSION D'UTILISATION.....
PRESSIONE DI ESERCIZIO.....

THERMAL RANGE OF APPLICATION.....
THERMISCHER ANWENDUNGSBEREICH..... -40°C BIS +80°C
GAMME D'APPLICATION THERMIQUE.....
CAMPO DI APPLICAZZIONE TERMICA.....

MEDIUM..... AIR
MEDIUM..... LUFT
FLUIDE..... AIR
FLUIDO..... ARIA

INSTALLATION POSITION AS DRAWN
EINBAULAGE WIE GEZEICHNET
POSITION D'INSTALLATION SUIVANT DESSIN
POSIZIONE DI MONTAGGIO COME DISEGNATO

General Specification:	JED-334-1Size ISO 14405-1 E				
Further Technical Data:					
Doc. Code:		Sheet:	To		
General Tolerances JED-261					
	Range of Nominal Dimensions (± mm)				
Class 1)	≤ 50	> 50 ≤ 180	> 180 ≤ 400	> 400	∢
Fine	0.5	1.0	1.5	2.0	
Medium	1.0	2.0	3.0	4.0	±3°
Coarse	2.0	3.5	5.0	6.5	
Topped Holes acc.	JED-152				
1) Tolerance Class Applied Crossmarked					

Copyright WABCO®

Date	Signature
Drawn	
2013-03-05	Dziewulski
Checked	
2013-03-05	Szczupiak
Szuberski	
Szuberski	

WABCO (N)

BRAKE CHAMBER
MEMBRANZYLINDER 24
VASE A DIAPHRAGME
BRAKE CHAMBER

Mass	Scale	Material No.			Date of first issue: 78-01-19		
					Doc. Code	Language	Sheet
3.57 KG	1:1	423 056 000 0			005	ML	1/1
Size	CAD System						
A 1	Pro/E	ECN-No.	Revision	Techn. Resp.	Replacement for		
		160816	2 x N	5430	Orig. v. 77-02-11		

100mm

Tutti i diritti di proprietà intellettuale inerenti, nonché quelli di sfruttamento e di disposizione del presente documento, sono riservati a WABCO. Non è permesso riprodurre o rendere accessibile a terzi il presente documento o parti di esso senza il nostro consenso scritto.

Copyright of this document and giving it to others and the use or communication of the contents thereof, are forbidden without express authority. Offenders are liable to the payment of damages. All rights are reserved in the event of the grant of a patent or registration of a utility model or design. This document is the subject of copyright.