SURFACE PROTECTION	
I	JED-240-3
II	JED-256-1
III	JED-240-2

MEDIUM : AIR
THERMAL RANGE OF APPLICATION : -40°C...+80°C
SERVICE PRESSURE : Pe max. = 10.2 bar (TEMPORARILY : Pe max. = 13 bar)
AL = ADHESIVE LABEL

<!>	SAFETY CHARACTERISTICS	0
<>	SIGNIFICANT CHARACTERISTICS	0
<CI>	CUSTOMER INTERFACE	7

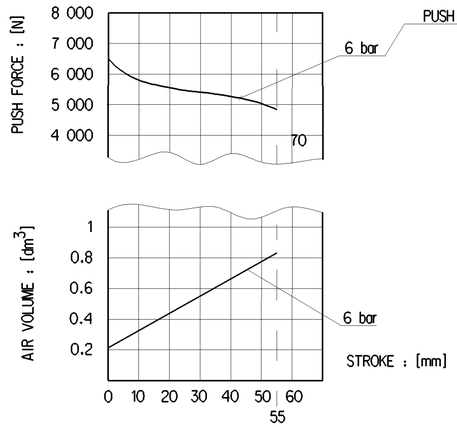

DEAD VOLUME AT : 0 bar:=0.069 dm³

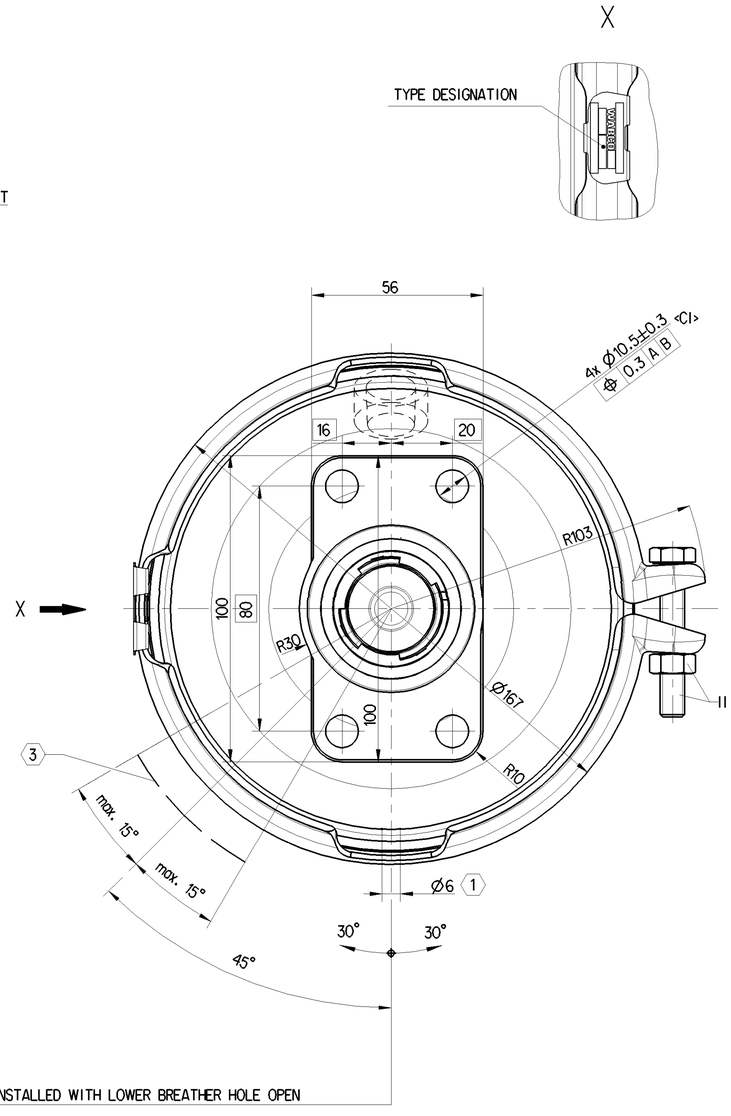

TO BE INSTALLED WITH LOWER BREATHER HOLE OPEN

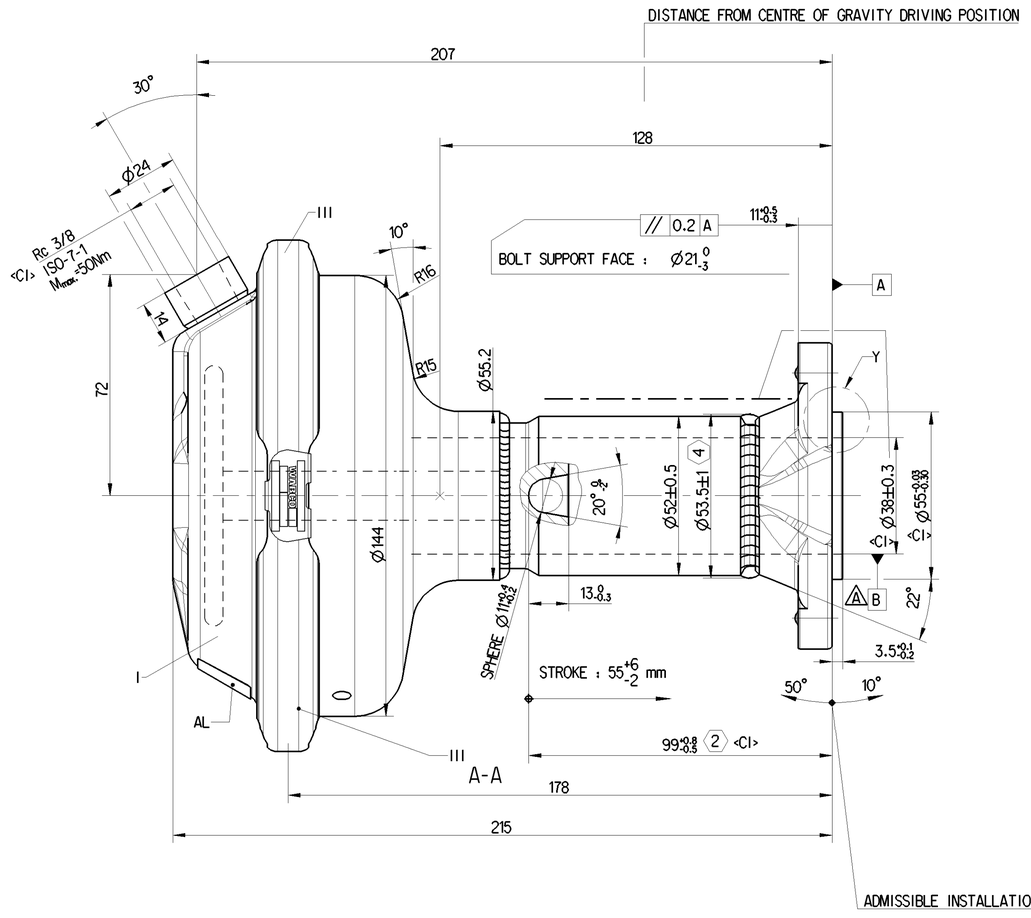

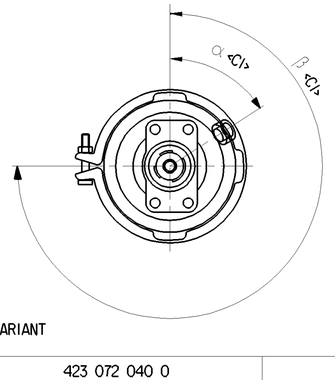

VARIANT

Y
2:1

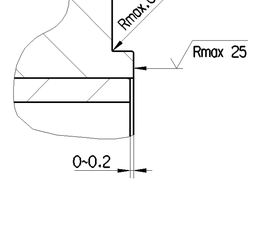

423 072 040 0	423 072 041 0
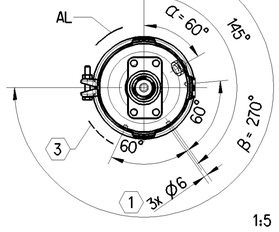	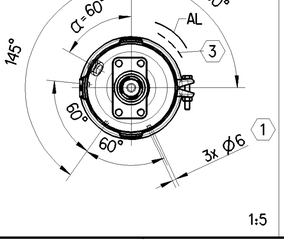
1:5	1:5

MAIN VIEWS REFER TO DIMENSIONS ONLY
POSITION OF COMPONENTS SEE REPRESENTATION OF VARIANTS

1. OPEN BREATHER HOLE
2. AT A SPRING FORCE OF : 150N
3. START AND END OF THE WELD SEAM
4. EXCEPTION START AND END OF THE WELD SEAM

423 072 041 0
423 072 040 0
WABCO
IDENTIFICATION

General Specification: ISO 8015, JED-334-1, Size ISO 14405 LP
Further Technical Data:
Doc. Code: | Sheet: | To
General Tolerances JED-261

Class 1)	Range of nominal dimensions in mm ≤ 50	> 50 ≤ 180	> 180 ≤ 400	> 400	
Fine		±0.5	±1	±1.5	±2	±3°
Medium	X	±1	±2	±3	±4	
Coarse		±2	±3.5	±5	±6.5	

Tapped Holes acc. ISO-7-1
1) Tolerance Class Applied Crossmarked

Copyright WABCO®

Date	Signature
Drawn 2023-01-18	Kolinka
Checked 2023-01-18	Franz

Dimensions in mm

WABCO
BRAKE CHAMBER WEDGE 16

Mass	Scale	Material No.	Date of first issue: 2022-03-11
3.74 kg	1:1	423 072 049 0	Doc.Code 053 / Language EN / Sheet 1/1
Size A 1	CAD System CREO	ECN-No. 513129 / Revision 1x A / Techn. Resp. 5940	Replacement for -

100mm

Toute Communication ou reproduction de ce document, toute exploitation ou communication de son contenu sont interdites, sauf autorisation écrite. Tous droits de propriété intellectuelle réservés, notamment en matière de brevets et de modèles.
Weitergabe sowie Vervielfältigung dieser Unterlage, Verwertung und Mitteilung ihres Inhalts nicht gestattet, soweit nicht ausdrücklich zugestanden. Zuwiderhandlungen verpflichten zu Schadensersatz. Alle Rechte für den Fall der Patent-, Gebrauchsmuster- oder Geschmacksmustereintragung vorbehalten.
Non è permesso consegnare o farci a riprodurre questo documento, né utilizzare il contenuto o renderlo comunque noto a terzi senza esplicita autorizzazione. Ogni violazione obbliga al risarcimento dei danni. Si riservano i diritti derivanti da brevetti o modelli.
È fatto riserva di tutti i diritti derivanti da brevetti o modelli.
Copying of this document and giving it to others and the use or communication of the contents thereof, are forbidden without express authority. Offenders are liable to the payment of damages. All rights are reserved in the event of the grant of patent or registration of a utility model or design. The document is the subject of copyright.