PART CODE	MATERIAL	SURFACE PROTECTION
XII	PLASTIC	NO TREATMENT
XI	RUBBER	NO TREATMENT
X	STAINLESS STEEL	NO TREATMENT
IX	BRASS	NO TREATMENT
VIII	ZINC ALLOY	CHROMATED
VII	ALUMINIUM ALLOY	ANODISED
VI	ALUMINIUM ALLOY	CHROMATED
V	CAST IRON	PAINTED
IV	STEEL	POWDER COATED
III	STEEL	PAINTED
II	STEEL	PHOSPHATED
I	STEEL	ZINC PLATED

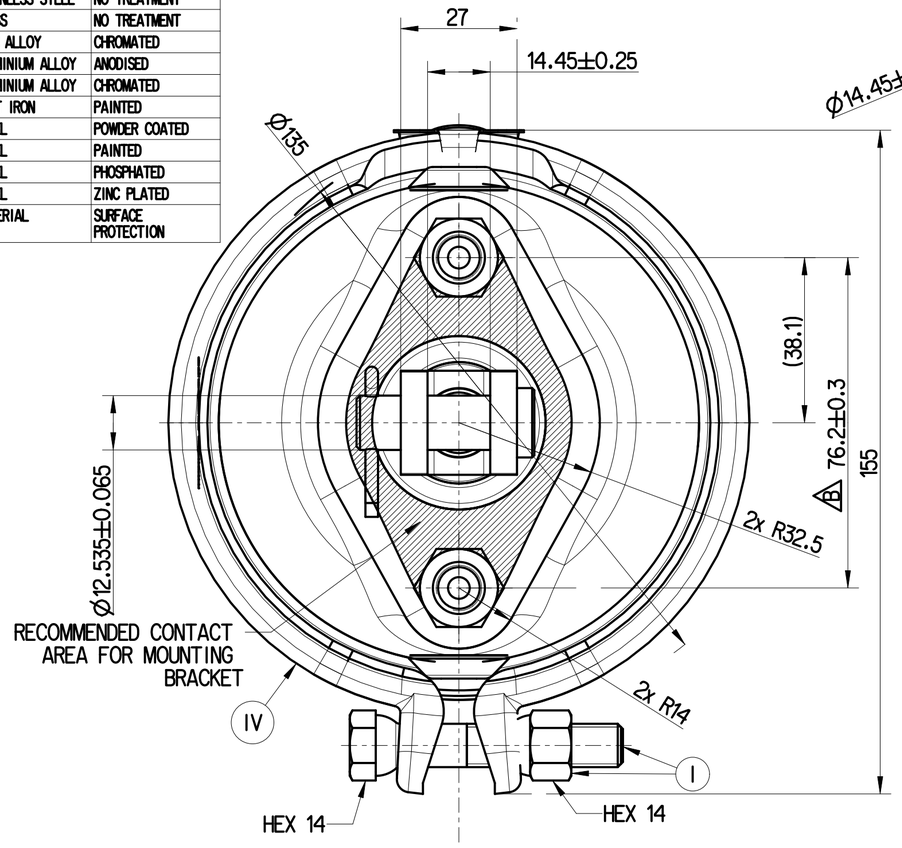

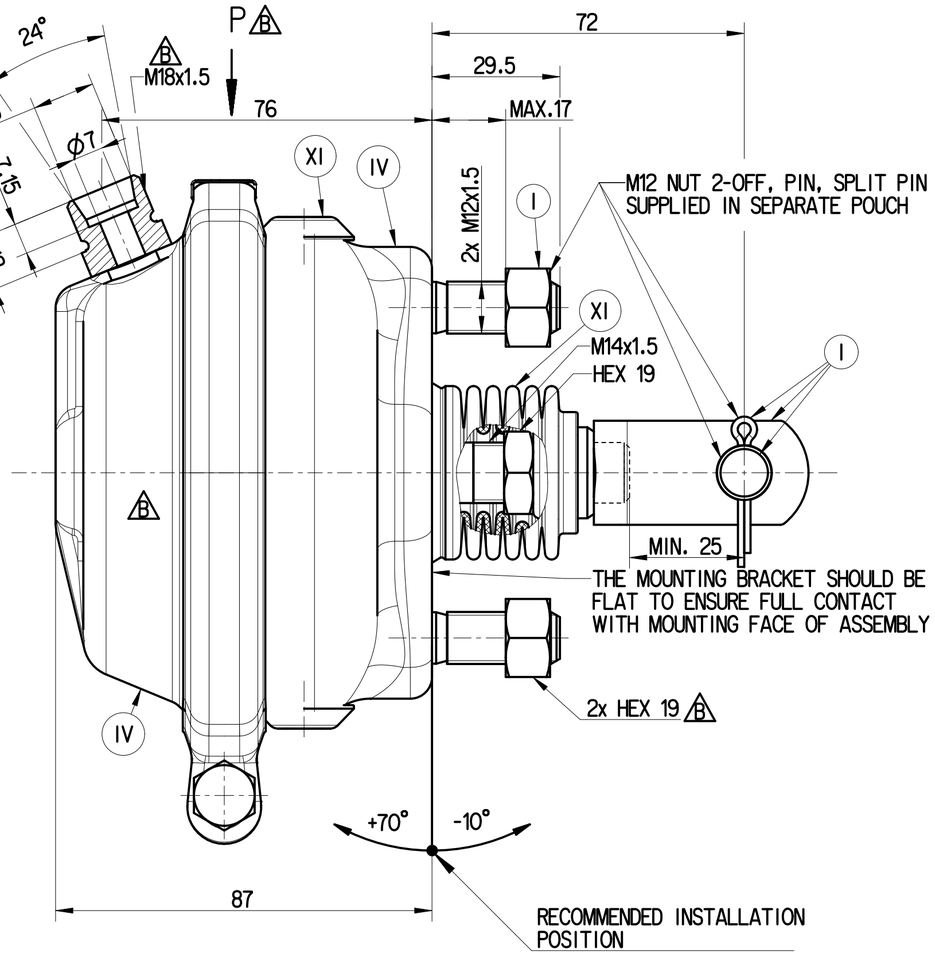

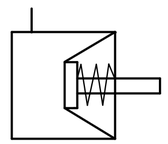

CIRCUIT DIAGRAM

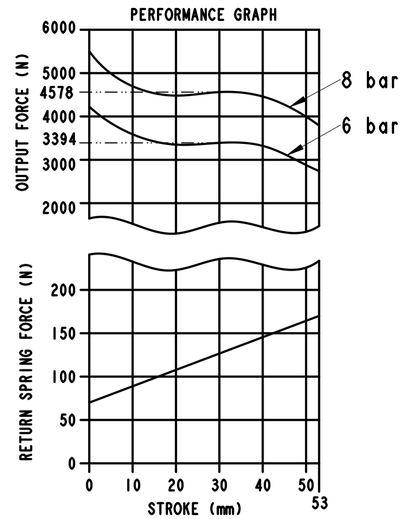

NOMINAL VALUES GIVEN
TOLERANCE: ±5% FOR 1/3 TO 2/3 OF STROKE

S.No.	NOTES	
1	PRODUCT FUNCTION AND RELIABILITY	
1.1	WORKING MEDIUM	AIR
1.2	NORMAL WORKING PRESSURE	8 bar
1.3	MAX. WORKING PRESSURE (TEMPORARILY)	10 bar
1.4	STROKE	53 mm MIN.
1.5	INNER DIAMETER OF SERVICE CHAMBER	105.75 mm
1.6	PRESSURE AT WHICH PUSHROD STARTS MOVING (LIFT OFF PRESSURE AT 0 STROKE)	< 0.3 bar
1.7	PRESSURE AT WHICH PUSHROD IS FULLY OUT (LIFT OFF PRESSURE AT FULL STROKE)	< 0.5 bar
1.8	THERMAL RANGE OF APPLICATION	-40°C TO +80°C
1.9	ARTICULATION OF PUSHROD IN ANY DIRECTION (AT ZERO STROKE)	MAX. 1°31′
1.10	ARTICULATION OF PUSHROD IN ANY DIRECTION (AT FULL STROKE)	MAX. 4°24′
1.11	CORROSION RESISTANCE	240 HOURS OF NSS
2	CLOSURE SLEEVE SHOULD BE KEPT IN THREADED PORT UNTILL THE HOSE ASSEMBLY CONNECTED TO THE THREADED PORT	
3	MALE THREAD IS FITTED WITH CLOSURE SLEEVE FOR STORAGE AND TRANSIT PURPOSES	

General Specification: ISO 8015, JED-334-1, Size ISO 14405 LP
Further Technical Data:
Doc. Code: Sheet: To

General Tolerances JED-261

Class 1)		Range of nominal dimensions in mm ≤ 50	> 50 ≤ 180	> 180 ≤ 400	> 400	
Fine		±0.5	±1	±1.5	±2	±3°
Medium	X	±1	±2	±3	±4	
Coarse		±2	±3.5	±5	±6.5	

Tapped Holes acc.
1) Tolerance Class Applied Crossmarked

Copyright ZF®

	Date	Signature
Drawn	2025-05-14	Pratheesh
Checked	2025-06-04	Arangarasan

Dimensions in mm

BRAKE CHAMBER TYPE 9

Mass	Scale	Material No.	Date of first issue: 2015-08-14		
~1.79 kg	1:1	423 102 003 0	Doc.Code 005	Language EN	Sheet 1/1
Size A 2	CAD System CREO	ECN-No. 519020	Revision 9 B	Techn. Resp. 5340_WIN	Replacement for -

100mm

Toute Communication ou reproduction de ce document, toute exploitation ou communication de son contenu sont interdites, sauf autorisation expresse. Tout manquement à cette règle constitue un abus évident et expose son auteur au versement de dommages et intérêts. Tous droits de propriété industrielle réservés, notamment en matière de brevets et de modèles.

Weitergabe sowie Vervielfältigung dieser Unterlage, Verwertung und Mitteilung ihres Inhalts nicht gestattet, soweit nicht ausdrücklich zugesichert. Zuwiderhandlungen stellen einen offensichtlichen Missbrauch dar und verpflichten zu Schadensersatz. Alle Rechte für den Fall der Patenterteilung oder Gebrauchsmuster-Eintragung vorbehalten.

Non è permesso consegnare a terzi o riprodurre questo documento, né utilizzarne il contenuto o renderlo comunque noto a terzi senza autorizzazione esplicita. Ogni infrazione costituirà un evidente abuso e comporterà il risarcimento dei danni subiti. E' fatta riserva di tutti i diritti derivanti da brevetti o modelli.

Copying of this document and giving it to others and the use or communication of the contents thereof, are forbidden without express authority. Contravention of this restriction will constitute an evident abuse and result in a liability to the payment of damages. All rights are reserved in the event of the grant of patent or registration of a utility model or design. This document is the subject of copyright.