SURFACE PROTECTION	
I	JED-240-3
II	JED-256-5
III	JED-364
IV	JED-371-0
V	BRASS
VI	JED-240-1 Ⓑ

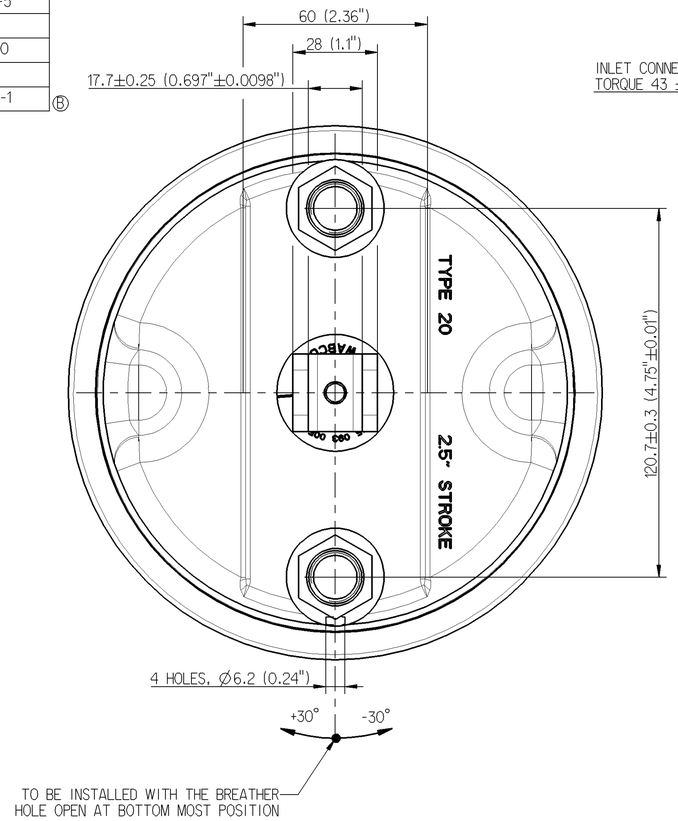

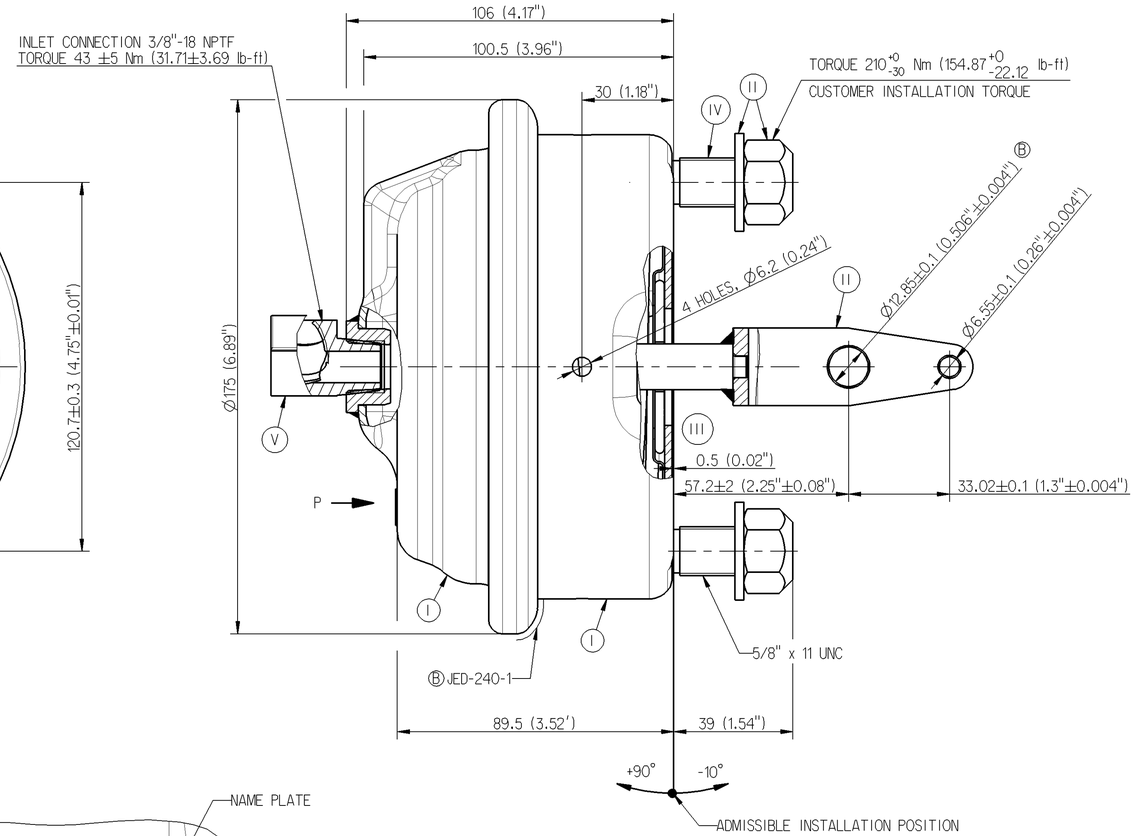

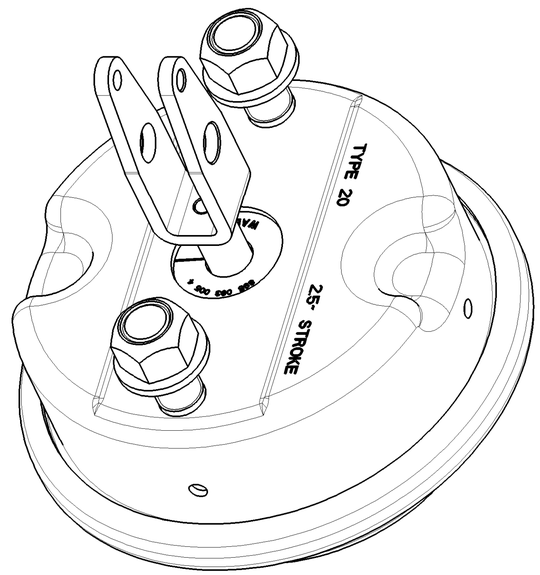

SL.No.	NOTES	
1.1	WORKING MEDIUM	AIR
1.2	WORKING PRESSURE	8 bar (116 PSI)
1.3	MAXIMUM PRESSURE (TEMPORARILY)	10 bar (145 PSI)
1.4	STROKE	64 mm MINIMUM (2.5" MINIMUM)
1.5	PRESSURE AT WHICH PUSH ROD STARTS MOVING (LIFT OFF PRESSURE-0 mm STROKE)	< 0.35 bar (5.1 PSI)
1.6	PRESSURE AT WHICH PUSH ROD IS FULLY OUT (LIFT OFF PRESSURE-76 mm STROKE)	< 0.5 bar (7.25 PSI)
1.7	THERMAL RANGE OF APPLICATION	- 40°C TO +80°C (-40°F TO 176°F)
1.8	OPEN PORT TO BE FITTED WITH CLOSURE PLUG FOR STORAGE AND TRANSIT PURPOSE	

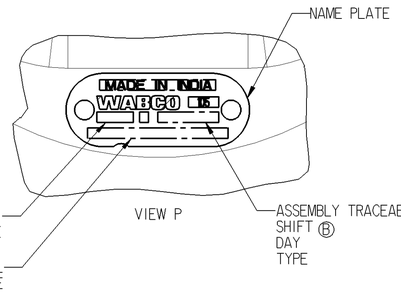

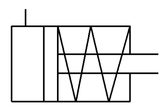

CIRCUIT DIAGRAM

423 105 017 0	423 105 018 0

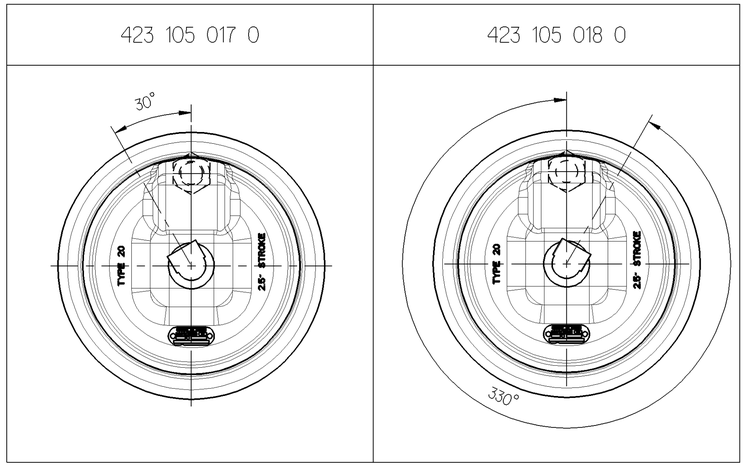

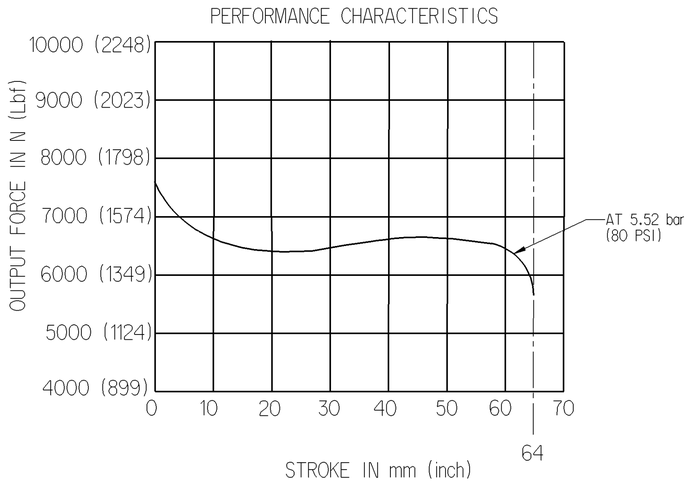

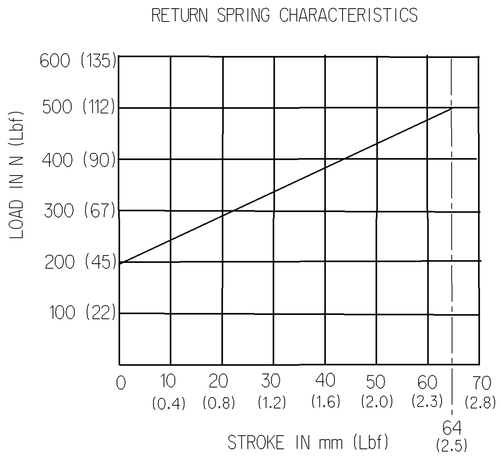

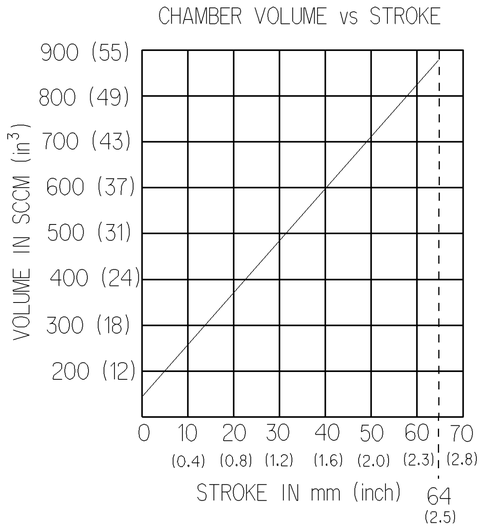

GRAPHS FOR INFORMATION ONLY

General Specification: JED-334-0						
Further Technical Data: 423 105 011 0						
Doc. Code: 035				Sheet: 1 To 4		
General Tolerances JED-261						
Class 1)	Range of Nominal Dimensions (± mm) ≤ 50	> 50 ≤ 180	> 180 ≤ 400	> 400	∢	
Fine	0.5	1.0	1.5	2.0	±3°	
Medium	X 1.0	2.0	3.0	4.0		
Coarse	2.0	3.5	5.0	6.5		
Tapped Holes acc. JED-686						
1) Tolerance Class Applied Crossmarked						

Copyright WABCO®

Date	Signature
Drawn 2013-03-26	Anand
Checked 2013-04-26	Arangarasan
Expert STEFANIAK	

WABCO

BRAKE CHAMBER TYPE 20

Mass	Scale	Material No.	Date of first issue: 2011-07-06		
3.0 KG	1:1	423 105 017 0	Doc.Code 053	Language EN	Sheet 1/1
Size A 1	CAD System Pro/E				

ECN-No.	Revision	Techn. Resp.	Replacement for
160851	4 B	5340	-

100mm

Tout Communication ou reproduction de ce document, toute exploitation ou communication de son contenu sont interdites, sauf autorisation expresse. Tout manquement à cette règle constitue un délit, évident et expose son auteur au versement de dommages et intérêts. Tous droits de propriété industrielle et droits d'auteur gagnés par l'octroi d'un brevet ou l'enregistrement d'un modèle.

Weitergabe sowie Vervielfältigung dieser Unterlage, Verwertung und Mitteilung ihres Inhalts nicht gestattet, soweit nicht ausdrücklich zugestanden. Zuwiderhandlungen stellen offensichtlich Wettbruch dar und verpflichten zu Schadensersatz. Alle Rechte für den Fall der Patenterteilung oder Gebrauchsmuster-Eintragung vorbehalten.

Non è permesso consegnare o terzi o riprodurre questo documento, né utilizzarne il contenuto o renderlo comunque noto a terzi persone autorizzate espressamente. Qualsiasi violazione costituisce un illecito doloso e comporterà il risarcimento dei danni subiti. Tutti i diritti di proprietà industriale e diritti d'autore sono riservati.

Copying of this document and giving it to others and the use or communication of the contents thereof, are forbidden without express authority. Offenders are liable to the payment of damages. All rights are reserved in the event of the grant of a patent or the registration of a utility model or design. The reserved rights apply.