SURFACE PROTECT./OBERFL. SCHUTZ	
I	JED-240-3
II	JED-256-1
III	JED-371

14 H11	$^{+0.110}_{0}$
14 h11	$^{0}_{-0.110}$

THEORETICAL SWIVEL POINT OF THE PUSH ROD
THEOR. SCHWENKPUNKT DER DRUCKSTANGE
CENTRE D'ARTICULATION THEORIQUE DE LA TIGE
CENTRO D'ARTICOLAZIONE TEORICO DELL ASTA

BREATHER HOLE
ATMUNGSBOHRUNG 4 x Ø6
TROU DE RENIFLANT
FORO RESPIRATORE

TORQUE :
ANZUGSMOMENT : $180\,^{+30}_{0}$ Nm
COUPLE DE SERRAGE :
COPPIA DI SERRAGGIO:

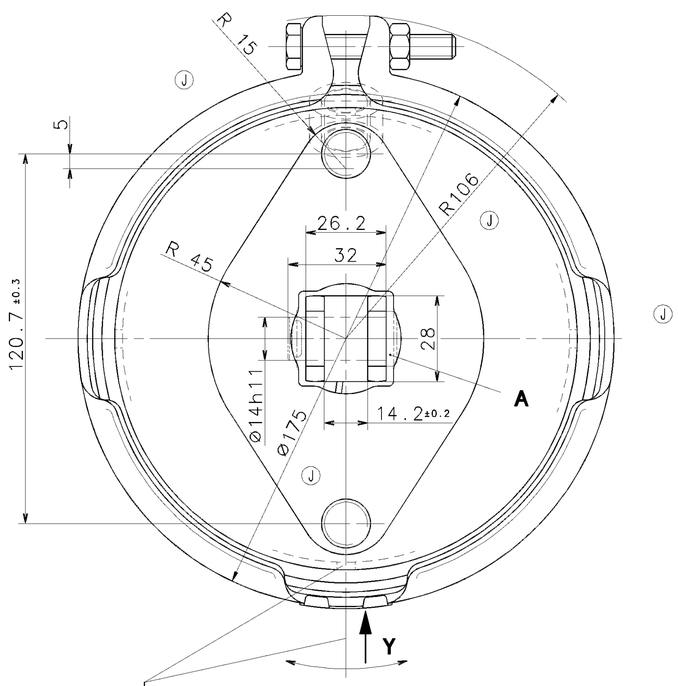

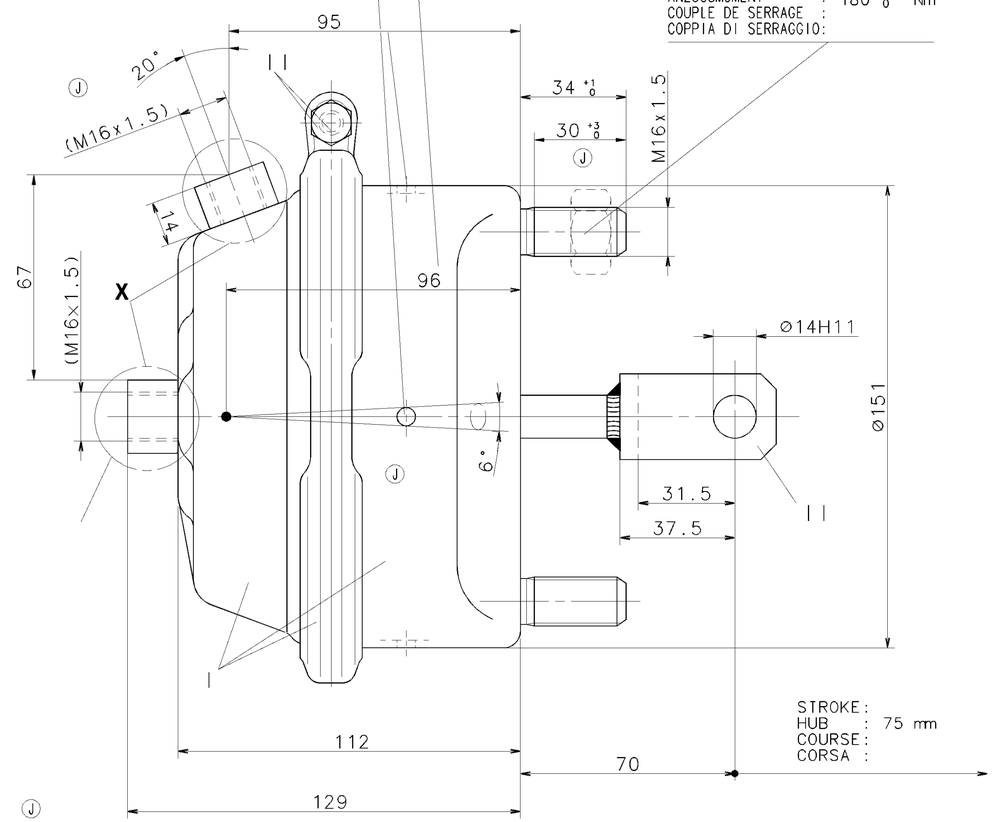

STROKE:
HUB : 75 mm
COURSE:
CORSA :

FORCE OF RETURN SPRING :
RUECKSTELLKRAFT DER FEDER :
EFFORT DU RESSORT DE RAPPEL :
FORZA DELLA MOLLA RITORNO : 100 ±10 N

EXTERNAL STROKE LIMIT
HUBBEGRENZUNG EXTERN
LIMITE DE COURSE EXTERNE
LIMITAZIONE DI CORSA ESTERNO

INSTALLATION POSITION : OPTIONAL
EINBAULAGE : BELIEBIG *
POSITION D'INSTALLATION : A INDIFFERENTE
POSIZIONE DI MONTAGGIO : A SCELTA

THERMAL RANGE OF APPLICATION :
THERMISCHER ANWENDUNGSBEREICH : -40° C..+80° C
GAMME D'APPLICATION THERMIQUE :
CAMPO DI APPLICAZIONE TERMICA :

SERVICE PRESSURE :
BETRIEBSDRUCK : pe = max. 8 bar
PRESSION DE SERVICE :
PRESSIONE D ESERCIZIO :

MEDIUM : AIR
MEDIUM : LUFT
FLUIDE : AIR
FLUIDO : ARIA

*) TO BE INSTALLED WITH LOWER BREATHER HOLE
IM EINBAUZUSTAND UNTERE ATMUNGSBOHRUNG ±30°
A MONTER AVEC LE RENIFLARD INFERIEUR
INSTALLAZIONE : CON IL FORO DI SFIATO INFERIORE

Y

TYPE DESIGNATION
TYPENBEZEICHNUNG
TYPE
TIPO DI DESIGNAZIONE

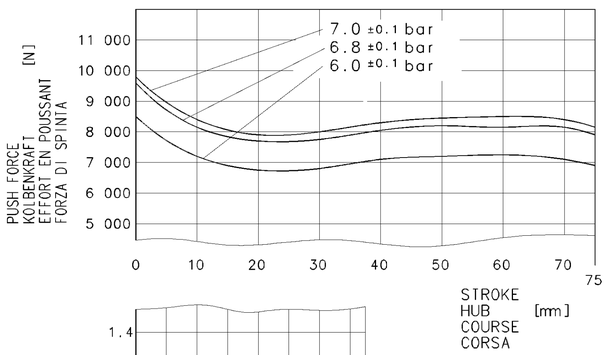

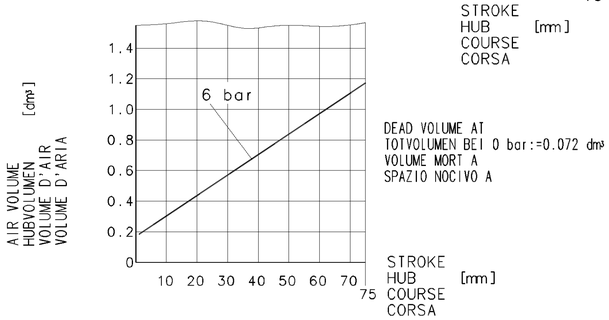

DEAD VOLUME AT
TOTVOLUMEN BEI 0 bar:=0.072 dm³
VOLUME MORT A
SPAZIO NOCIVO A

X 2:1

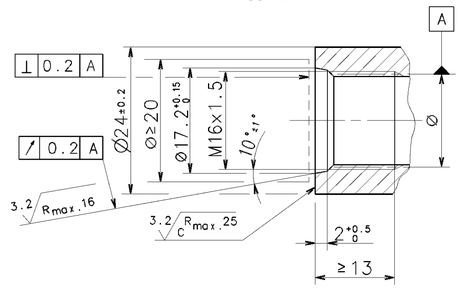

BY-PACKING :
BEIPACK :
PAQUET JOINT :
PACKO RIUNCHIUSO:

A 423 902 531 2

ON SPECIAL ORDER ONLY
NUR AUF BESTELLUNG
SUR COMMANDE SEULEMENT
SU ORDINAZIONE SOLAMENTE

GENERAL SPECIFICATION:	JED-334		
FURTHER TECHNICAL DATA:			
DOC. CODE:	SHEET:	TO	

GENERAL TOLERANCES

CLASS 1)		RANGE OF NOMINAL DIMENSIONS (± mm) ≤50	> 50 ≤180	>180 ≤400	>400	∠
FINE		0,5	1,0	1,5	2,0	
MEDIUM	X	1,0	2,0	3,0	4,0	± 3°
COARSE		2,0	3,5	5,0	6,5	

TAPPED HOLES ACC. ISO 4039 / JED-152
1) TOLERANCE CLASS APPLIED CROSSMARKED

DCN-NO.	REV.	DATE
075765	9xJ	00-06-23
036524	H	87-02-13

100mm

CADAM-DRAWING COPYRIGHT

DATE	SIGNATURE	
DRAWN: 87-02-13	MUELLER	
CHECKED: 87-02-20	MYLIUS	
STANDARDIZATION: 87-02-19	PANTZER	

WABCO

BRAKE CHAMBER
MEMBRANZYLINDER
VASE A DIAPHRAGME
BRAKE CHAMBER TYPE 20

MASS	SCALE	PRODUCT IDENTIFICATION NO.	DOC. CODE	SHEET
2.8 KG	1:1	423 105 094 0	605	1/1
SIZE A 1	I.R.I. 140	534	SHAPE CODE	REPLACEMENT FOR 423 105 094 0 OF 80-10-22

EXPERT CODE 7 2 3

PRODUCT TYPE 0 0 X

1009/016/3/04.93

605/633

TOUTE COMMUNICATION OU REPRODUCTION DE CE DOCUMENT, TOUTE EXPLOITATION OU COMMUNICATION DE SON CONTENU, NON LE PERMESSO CONSEGNARE A TERZI O RIPRODURRE QUESTO DOCUMENTO, NE UTILIZZARNE IL CONTENUTO O RENDERNE NOTI I CONTENUTI, SONO AUTORIZZATE SOLO PER LA NAZIONE CHE HA FIRMATO IL CONTRATTO DI LICENZA. ALTRI DIRITTI SONO RISERVATI IN ASSENZA DI TALE CONTRATTO.
DIESES DOKUMENT DARF OHNE VORHERIGE SCHRIFTLICHE ZUSTIMMUNG WEDER DIREKT NOCH INDIREKT AN DRITTE WEITERGEGEBEN, VERVIELFÄLTIGT UND MITTEILUNG IHRES INHALTS NICHT GESTATTET. SOWEIT EIN VERTRAG VORLIEGT, DARF DIESER NUR IN DEM VERTRAGSLAND, DAS DEN VERTRAG UNTERZEICHNET HAT, VERWENDET WERDEN. ALLE ANDEREN RECHTE BLEIBEN VORBEHALTEN.
WHEN GIVING OUT THIS DOCUMENT AND GIVING IT TO OTHERS AND THE USE OR COMMUNICATION OF THE CONTENTS THEREOF, ARE NOT PERMITTED UNLESS EXPRESSLY AUTHORISED. OFFENDERS ARE LIABLE TO THE PAYMENT OF DAMAGES. ALL RIGHTS ARE RESERVED IN THE EVENT OF THE GRANT OF A PATENT OR REGISTRATION OF A UTILITY MODEL OR DESIGN. THIS DOCUMENT IS THE SUBJECT OF COPYRIGHT.