SURFACE PROTECT./OBERFL. SCHUTZ		
IDENTIFICATION BENENNUNG DENOMINATION DENOMINAZIONE	423 105 299 0 423 105 297 0 423 105 296 0	423 105 298 0
I	JED-240-0 (RAL 3009)	JED-240-3
II	JED-256-1	JED-256-1
III	JED-045-M	JED-045-M
IV	JED-240-2	JED-240-2

MAIN VIEWS REFER TO DIMENSIONS ONLY
POSITION OF COMPONENTS SEE REPRESENTATION OF VARIATIONS
HAUPTANSICHTEN BEZIEHEN SICH NUR AUF DIE ABMESSUNGEN
POSITION DER BAUTEILE SIEHE ABWANDLUNGSDARSTELLUNGEN

14 f8	$^{-0.016}_{-0.043}$
14 H11	$^{+0.110}_{0}$
14 H8	$^{+0.027}_{0}$
14 B12	$^{+0.330}_{+0.150}$

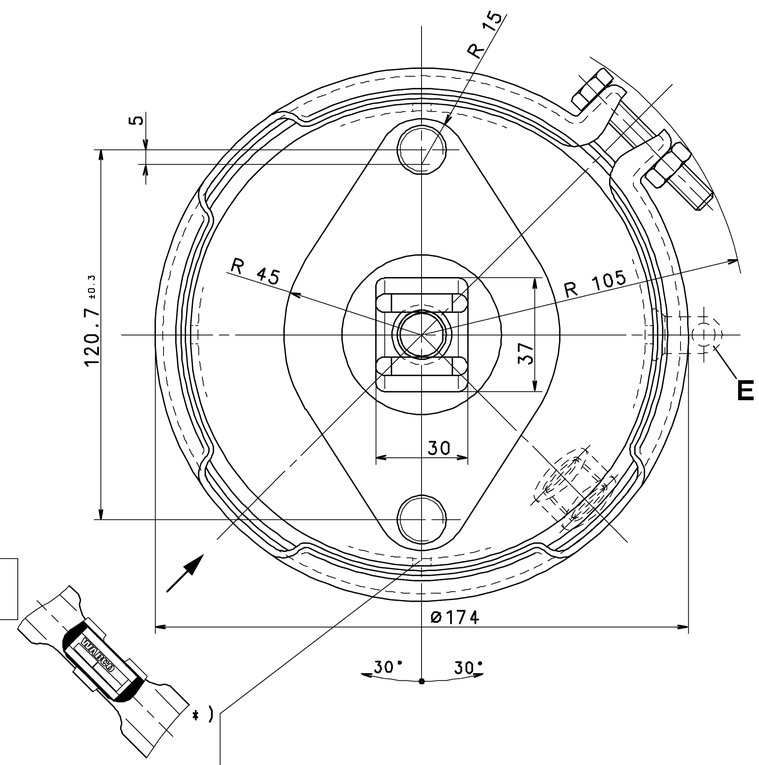

TO BE INSTALLED WITH LOWER BREATHER HOLE OPEN
IM EINBAUZUSTAND UNTERE ATMUNGSBOHRUNG GEOEFFNET
A MONTER AVEC LE RENIFLARD INFERIEUR OUVERT
INSTALLAZIONE : CON IL FORO DI SFIATO INFERIORE APERTO

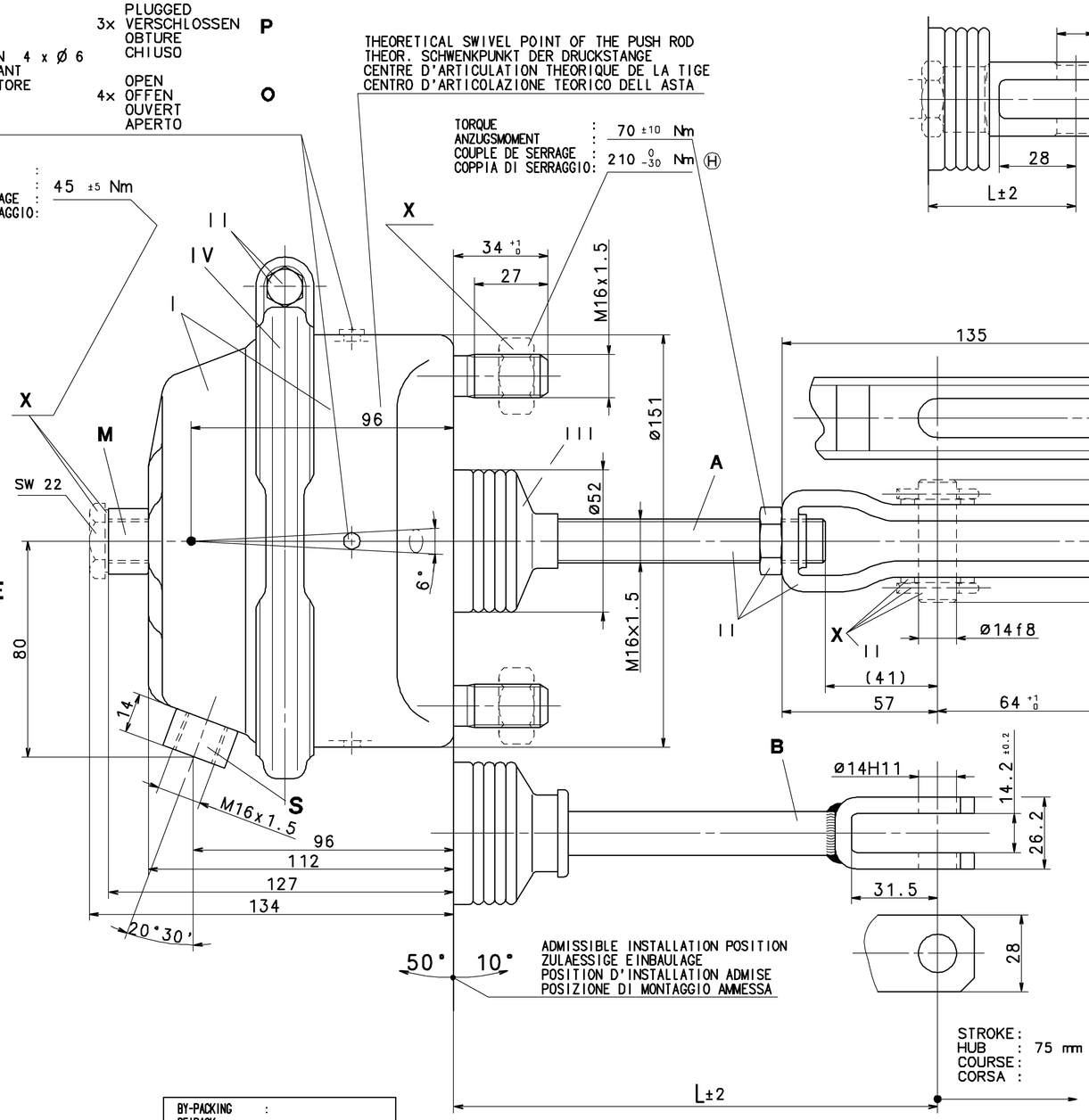

ADMISSIBLE INSTALLATION POSITION
ZULAESSIGE EINBAULAGE
POSITION D'INSTALLATION ADMISE
POSIZIONE DI MONTAGGIO AMMESSA

STROKE :
HUB : 75 mm
COURSE :
CORSA :

BY-PACKING	:
BEIPACK	:
PAQUET JOINT	: X 423 000 533 2
PACKO RIUNCHIUSO	:

FORCE OF RETURN SPRING
RUECKSTELLKRAFT DER FEDER
EFFORT DU RESSORT DE RAPPEL
FORZA DELLA MOLLA RITORNO : F [N]

EXTERNAL STROKE LIMIT
HUBBEGRENZUNG EXTERN
LIMITE DE COURSE EXTERNE
LIMITAZIONE DI CORSA ESTERNO

INSTALLATION POSITION : OPTIONAL *
EINBAULAGE : BELIEBIG
POSITION D'INSTALLATION : A INDIFFERENTE
POSIZIONE DI MONTAGGIO : A SCELTA

THERMAL RANGE OF APPLICATION :
THERMISCHER ANWENDUNGSBEREICH : -40 °C..+80 °C
GAMME D'APPLICATION THERMIQUE :
CAMPO DI APPLICAZIONE TERMICA :

SERVICE PRESSURE :
BETRIEBSDRUCK : pe = max. 10 bar
PRESSION DE SERVICE :
PRESSIONE D ESERCIZIO :

MEDIUM : AIR
MEDIUM : LUFT
FLUIDE : AIR
FLUIDO : ARIA

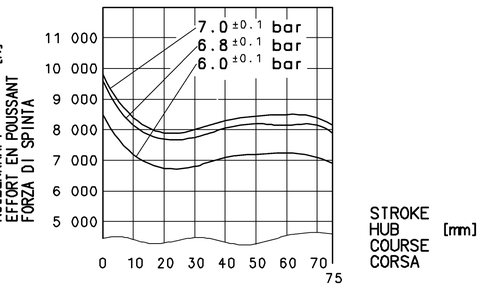

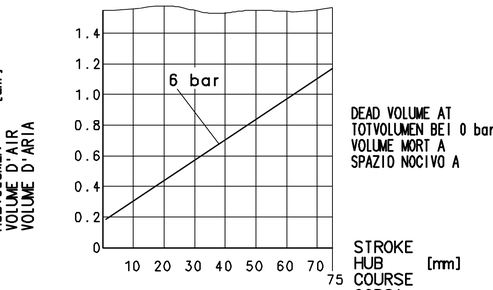

DEAD VOLUME AT
TOTVOLUMEN BEI 0 bar:=0.072 dm³
VOLUME MORT A
SPAZIO NOCIVO A

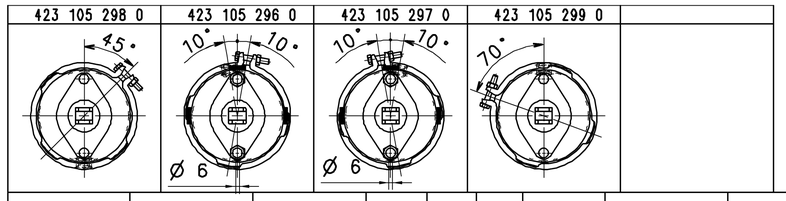

423 105 299 0		B+O	135			S			170±17
423 105 298 0		A+O	227			M + S	423 000 533 2		150±15 H
423 105 297 0		C+P	54			S		2x	170±17
423 105 296 0		C+P	54			S		2x	170±17
WABCO IDENTIFICATION	CUSTOMER'S NO. KUNDEN-NR. No. CLIENT No. CLIENTE	DESIGN AUSFUEHRUNG EXECUTION ESECUZIONE	L DIMENSIONS			PORT ANSCHLUSS ORIFICE ORIFICIO	BY-PACKING BEIPACK PAQUET JOINT PACKO RIUNCHIUSO		F [N]

GENERAL SPECIFICATION:	JED-334	
FURTHER TECHNICAL DATA:		
DOC. CODE:	SHEET:	TO

GENERAL TOLERANCES

CLASS 1)	RANGE OF NOMINAL DIMENSIONS (± mm) ≤50	>50 ≤180	>180 ≤400	>400	∠
FINE	0,5	1,0	1,5	2,0	
MEDIUM X	1,0	2,0	3,0	4,0	± 3°
COARSE	2,0	3,5	5,0	6,5	

TAPPED HOLES ACC. ISO 4039 / JED-152
1) TOLERANCE CLASS APPLIED CROSSMARKED

DON-NO.	REV.	DATE
112951	5x H	07-04-04
090108	2x G	04-04-14
088424	12xF	04-02-27
072652	4x E	99-10-06
071704	3x D	99-06-29
067305	1x C	98-05-28
045311	1x B	89-12-15
040634	5x A	89-01-17

100mm

CADAM-DRAWING COPYRIGHT

	DATE	SIGNATURE
DRAWN:	87-04-21	MUELLER
CHECKED:	87-04-24	MYLIUS
STANDARDIZATION:	87-04-24	PANTZER

WABCO

BRAKE CHAMBER 20
MEMBRANZYLINDER
VASE A DIAPHRAGME
BRAKE CHAMBER

MASS	SCALE	PRODUCT IDENTIFICATION NO.	DOC. CODE	SHEET
2.8 KG	1:1	423 105 898 0	653	1/1
SIZE A 1	I.R.I. 529 H	SHAPE CODE H	REPLACEMENT FOR	

EXPERT CODE 8 1 5 H

PRODUCT TYPE

TOUTE COMMUNICATION OU REPRODUCTION DE CE DOCUMENT, TOUTE EXPLOITATION OU COMMUNICATION DE SON CONTENU OU RENSEIGNEMENTS QUI EN PROCEDENT SONT INTERDITES SAUF AUTORISATION ECRITE. TOUS DROITS DE PROPRIETE INDUSTRIELLE ET DE DROIT D'AUTEUR RESERVES.
WETTERGUBE SOWIE VERVIELFALTIGUNG DIESER UNTERLAGE, VERWERTUNG UND MITTEILUNG IHRES INHALTS NICHT GESTATTET, SOWEIT NICHT AUSDRUCKLICH ZUGESTANDEN. ZUWIDERHANDELNDE SIND ZU SCHADENSERSATZ VERPFLICHTET. ALLE RECHTE FUER DEN FALL DER ERTEILUNG EINES PATENTS ODER EINTRAGUNG EINES GEBRAUCHSMUSTERS VORBEHALTEN.
NON È PERMESSO CONSEGNARE A TERZI O RIPRODURRE QUESTO DOCUMENTO, NE UTILIZZARE IL CONTENUTO O RENDERE COMUNQUE NOTI A TERZI I RISULTATI DI UN'ESPLORAZIONE. TUTTI I DIRITTI DI PROPRIETÀ INDUSTRIALE E DI DIRITTO D'AUTORE SONO RISERVATI.
COPYING OF THIS DOCUMENT AND GIVING IT TO OTHERS AND THE USE OR COMMUNICATION OF THE CONTENTS THEREOF ARE NOT PERMITTED WITHOUT AUTHORITY. ALL RIGHTS ARE RESERVED IN THE EVENT OF THE GRANT OF A PATENT OR REGISTRATION OF A UTILITY MODEL OR DESIGN. THIS DOCUMENT IS THE SUBJECT OF COPYRIGHT.

1000/016/3/04-93
603/653