SURFACE PROTECTION OBERFLAECHERSCHUTZ		
SI.No.	JED	DESCRIPTION
I	JED-240-3	POWDER COATING
II	JED-256-1	ZINC ALLOY PASSIVATION
III	-	RUBBER

16 H10	+0.070 / 0
15 B14	+0.680 / +0.160

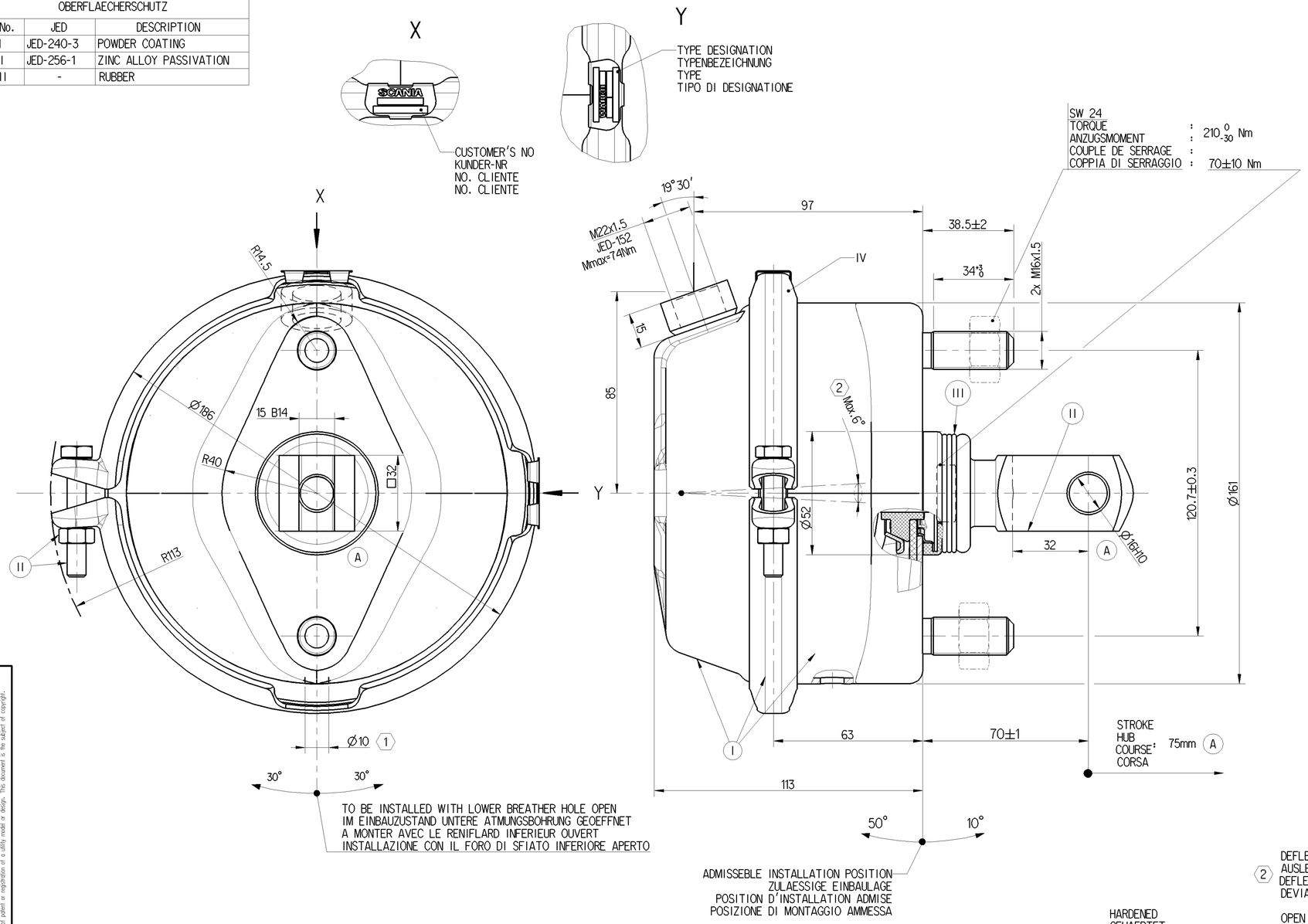

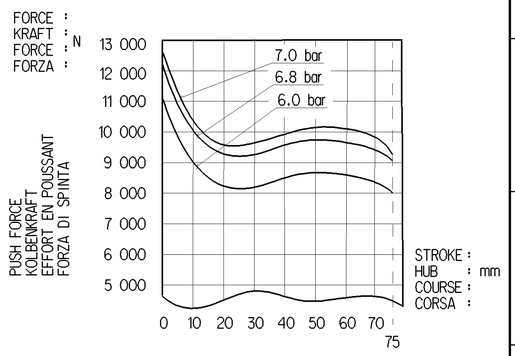

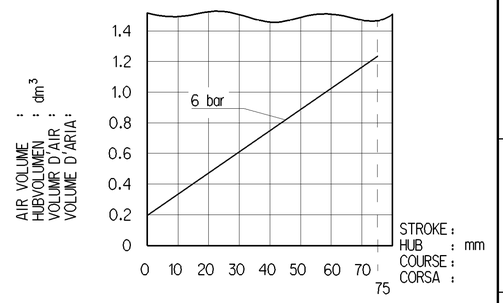

DEAD VOLUME AT
TOTVOLUMEN BEI 0 bar:=0.076 dm³
VOLUME MORT A
SPAZIO NOCIVO A

FORCE OF RETURN SPRING :
RUECKSTELLKRAFT DER FEDER :
EFFORT DU RESSORT DE RAPPEL : 220±25N
FORZA DELLA MOLLA RITORNO :

THERMAL RANGE OF APPLICATION :
THERMISCHER ANWENDUNGSBEREICH :
GAMME D'APLICATION THERMIQUE : -40°C ..+80°C
CAMPO DI APPLICAZIONE TERMICA:

MEDIUM : AIR
MEDIUM : LUFT
FLUIDE : AIR
FLUIDO : ARIA

SERVICE PRESSURE :
BETRIEBSDRUCK :
PRESSION DE SERVICE : Pe max. = 10 bar
PRESSIONE DI ESERCIZIO :

(TEMPORARILY :
(KURZZEITIG : Pe max. = 12 bar)
(DE COURTE DUREE :
(BREVE TEMPO SOLO:

WITH AVS

2 DEFLECTION:
AUSLENKUNG:
DEFLEXION : max. 6° AT STROKE / BEI HUB / A COURSE / A CORSA 0 mm
DEVIAZIONE:

1 OPEN BREATHER HOLE
OFTEN ATMUNGSBOHRUNG
OUVERT TROU RENIFLEUR
APERTO FORO RESPIRATORE

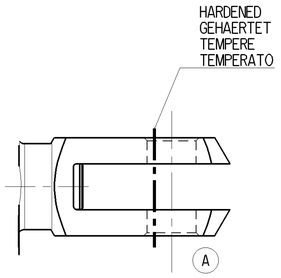

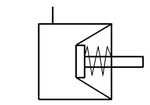

CIRCUIT DIAGRAM

423 106 187 0	2416129
WABCO	CUSTOMER'S NO KUNDEN-NR NO. CLIENTE NO. CLIENTE
IDENTIFICATION	

General Specification: JED-334-1 , Size ISO 14405 LP
Further Technical Data: PS4231060880
Doc. Code: 035 Sheet: 1 To 5

General Tolerances JED-261

Class 1)	Range of Nominal Dimensions (± mm) ≤ 50	> 50 ≤ 180	> 180 ≤ 400	> 400	∢
Fine	0.5	1.0	1.5	2.0	
Medium X	1.0	2.0	3.0	4.0	±3°
Coarse	2.0	3.5	5.0	6.5	

Tapped Holes acc. JED-152
1) Tolerance Class Applied Crossmarked

Copyright WABCO®

Date	Signature
Drawn 2016-05-13	Manojprabhakar
Checked 2016-12-23	Senthilkumar
Expert Senthilkumar	

WABCO

BRAKE CHAMBER
MEMBRANZYLINDER
VASE A DIAPHRAGME
BRAKE CHAMBER

TYPE 24

Mass	Scale	Material No.	Date of first issue: 2016-05-31		
3.6 KG	1:1	423 106 187 0	Doc.Code 053	Language MIL	Sheet 1/1
Size A 1	CAD System CREO	ECN-No. 172718 / Revision 4x A / Techn. Resp. 5340	Replacement for -		

100mm

Toute Communication ou reproduction de ce document, toute exploitation ou communication de son contenu sont interdites, sauf autorisation écrite. Tous droits de propriété industrielle réservés, notamment en matière de brevets et de modèles.

Non è permesso consegnare o terzi o riprodurre questo documento, né utilizzare il contenuto o renderlo comunque noto a terzi senza autorizzazione scritta. Ci riserviamo ogni diritto di proprietà industriale, anche ai fini della registrazione di brevetti o modelli.

Weitergabe sowie Vervielfältigung dieser Unterlage, Verwertung und Mitteilung ihres Inhalts nicht gestattet, soweit nicht ausdrücklich zugestanden. Zuwiderhandlungen verpflichten zu Schadensersatz. Alle Rechte für den Fall der Patent-, Gebrauchsmuster- oder Geschmacksmustereintragung vorbehalten.

Copying of this document and giving it to others and the use or communication of the contents thereof, are forbidden without express authority. Offenders are liable to the payment of damages. All rights are reserved in the event of the grant of patent or registration of a utility model or design. This document is the subject of copyright.