<CI> CUSTOMER INTERFACE | 0

SURFACE PROTECTION	
I	JED-240-3
II	JED-256-1
III	JED-371
IV	RUBBER / PLASTIC
V	JED-240-2

MEDIUM: AIR

NOMINAL DIAMETER: MIN. Ø8.5

THERMAL RANGE OF APPLICATION: -40°C...+80°C

SERVICE PRESSURE: Pe max. = 10.2 bar

(TEMPORARILY: Pe max. = 13 bar)

SW: WIDTH ACROSS FLATS

MAIN VIEWS REFLECT DIMENSIONS ONLY. FOR POSITION OF COMPONENTS SEE REPRESENTATIONS OF VARIANTS

(1) OPEN BREATHER HOLE

(2) DEFLECTION: max. 6° AT STROKE 0 mm

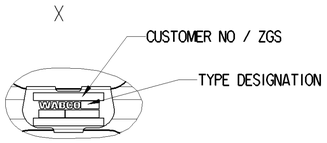

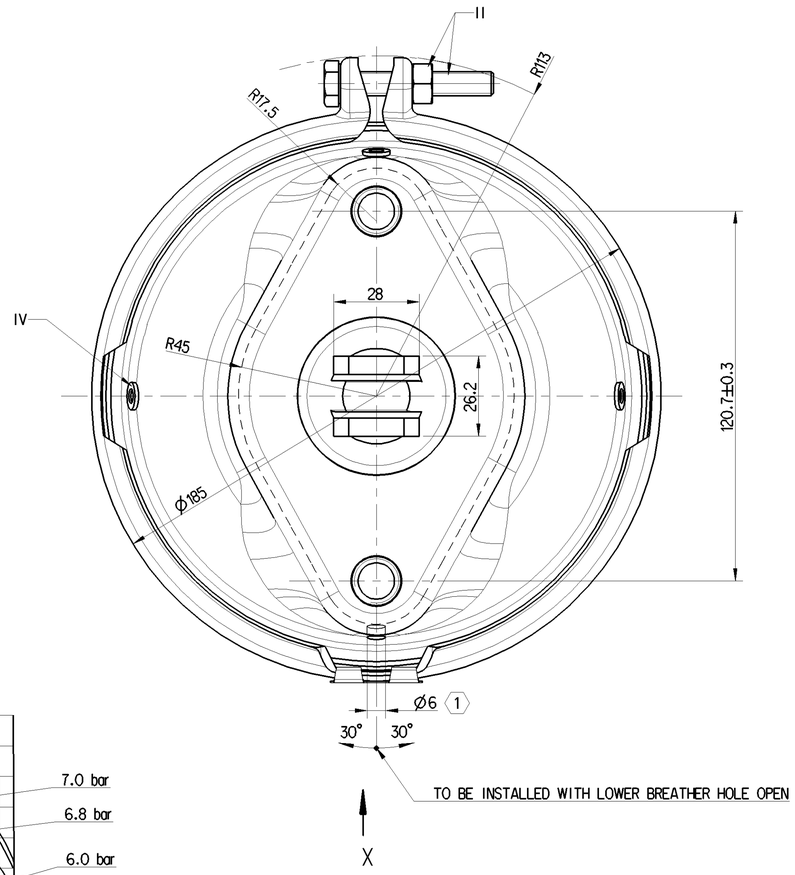

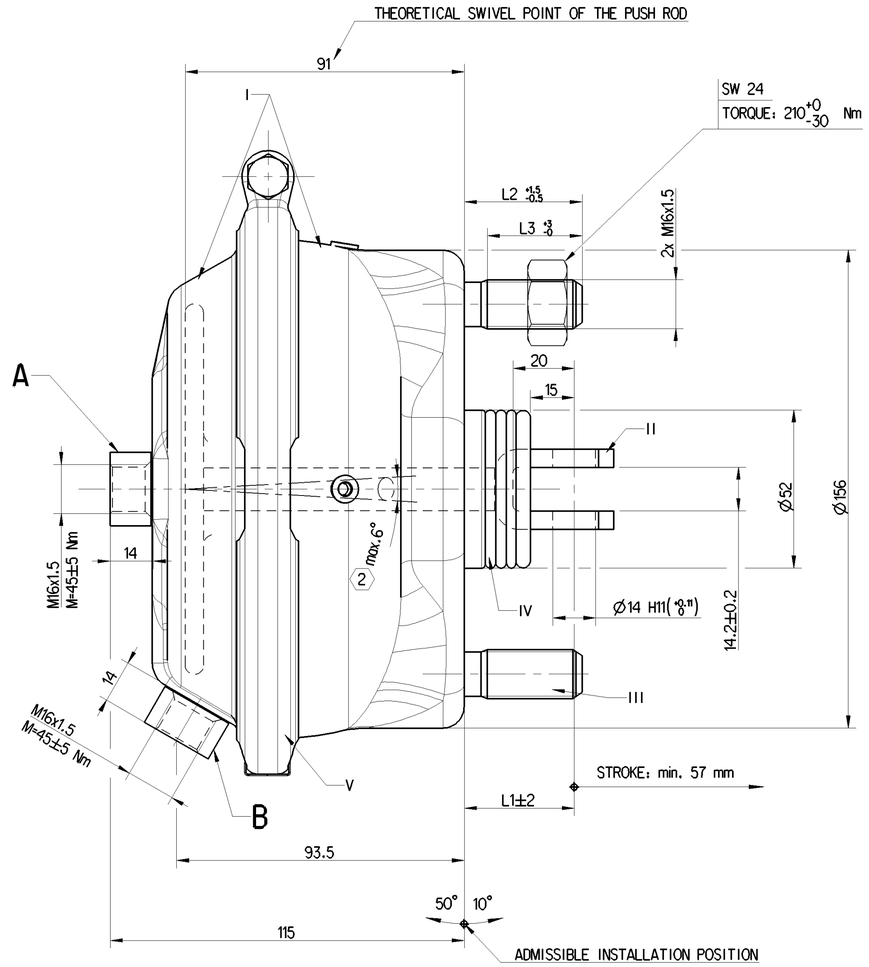

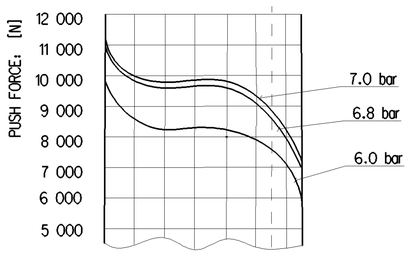

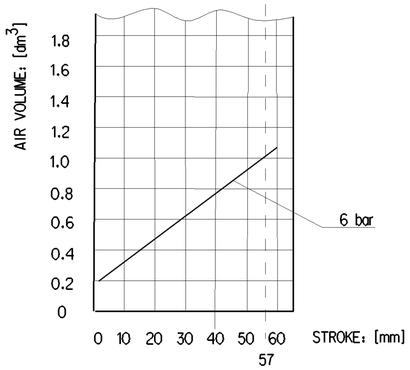

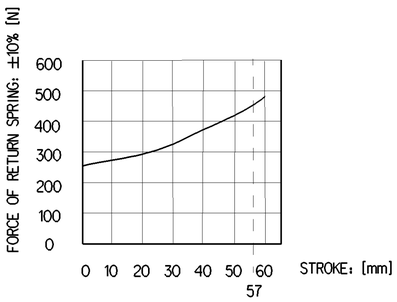

VARIANTS

423 106 204 0
423 106 203 0

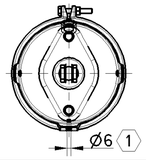

WABCO	CUSTOMER NO	AUSFUEHRUNG	ZGS	PORT	L1	L2	L3	MASS [kg]
423 106 204 0	A 382 420 741 8		002	A + B	37	38.5	31	3.7
423 106 203 0	A 382 420 731 8		002	B	37	38.5	31	3.7

IDENTIFICATION — DIMENSIONS

General Specification: ISO 8015, JED-334-1, Size ISO 14405 LP
Further Technical Data:
Doc. Code: — Sheet: — To

General Tolerances JED-261

Class 1)	X	Range of nominal dimensions in mm ≤ 50	> 50 ≤ 180	> 180 ≤ 400	> 400	∢
Fine		±0.5	±1	±1.5	±2	
Medium	X	±1	±2	±3	±4	±3°
Coarse		±2	±3.5	±5	±6.5	

Tapped Holes acc. JED-152
1) Tolerance Class Applied Crossmarked

Copyright WABCO®

Date	Signature
Drawn 2022-08-18	Oliveira
Checked 2022-08-22	Arangarasan A

WABCO

BRAKE CHAMBER 24 (D)

Dimensions in mm

Mass	Scale	Material No.	Date of first issue: 2007-07-03		
- kg	1:1	423 106 209 0	Doc.Code 053	Language EN	Sheet 1/1
Size A 1	CAD System CREO	ECN-No. 511635	Revision 2x D	Techn. Resp. 5340	Replacement for -

100mm

Toute Communication ou reproduction de ce document, toute exploitation ou communication de son contenu sont interdites, sauf autorisation écrite. Tous droits de propriété industrielle réservés, notamment en matière de brevets et de modèles.

Weitergabe sowie Vervielfältigung dieser Unterlage, Verwertung und Mitteilung ihres Inhalts nicht gestattet, soweit nicht ausdrücklich zugestanden. Gewerbliche Schutzrechte vorbehalten.

Vietato riprodurre o comunicare a terzi o riprodurre questo documento, né utilizzare il contenuto o renderlo comunque noto a terzi senza esplicita autorizzazione. Ogni proprietà industriale riservata, in particolare quella di brevetto e di registrazione di un modello.

Está prohibida la copia o puesta a disposición de terceros de este documento así como el uso y la comunicación de su contenido salvo con autorización expresa. Todos los derechos de propiedad industrial están reservados, especialmente los de patente y de registro de un modelo.

Não é permitido conceder a terceiros ou reproduzir este documento, nem utilizar o conteúdo e revelá-lo a terceiros sem autorização por escrito. Todos os direitos de propriedade industrial são reservados, nomeadamente os relativos a patentes e a modelos.

Copying of this document and giving it to others and the use or communication of the contents thereof, are forbidden without express authority. Offenders are liable to the payment of damages. All rights are reserved in the event of the grant of a patent or registration of a utility model or design. This document is the subject of copyright.