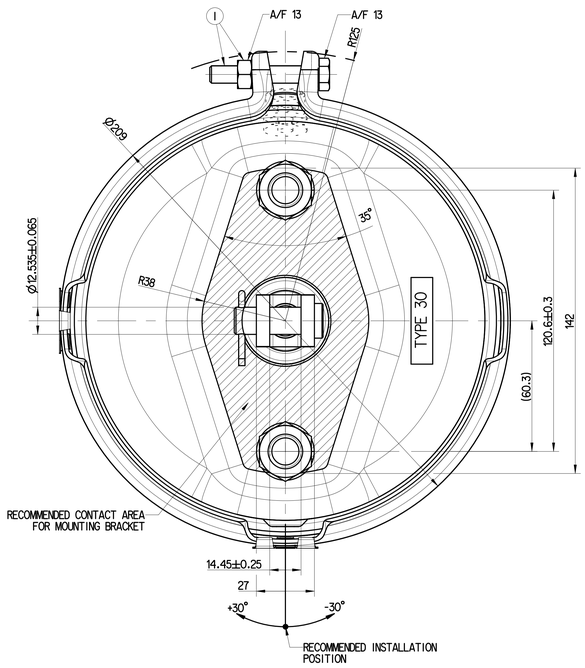

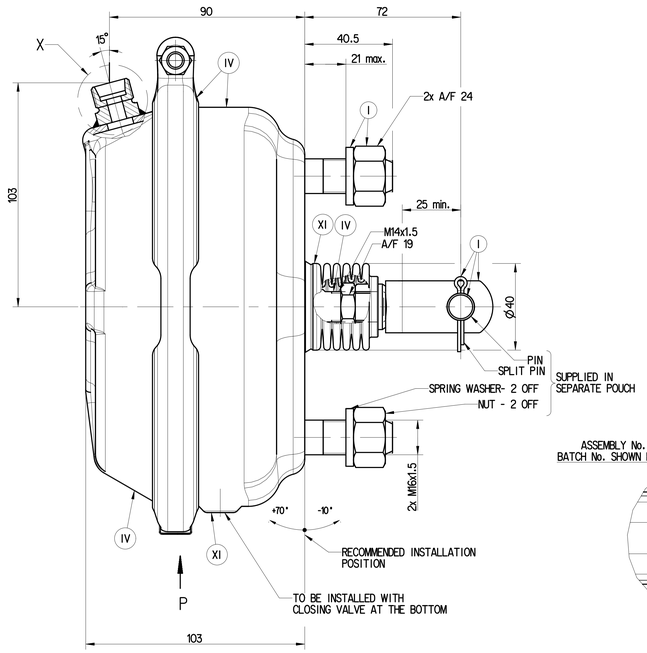

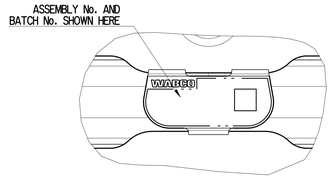

VIEW P
2:1

PERFORMANCE CHARACTERISTICS

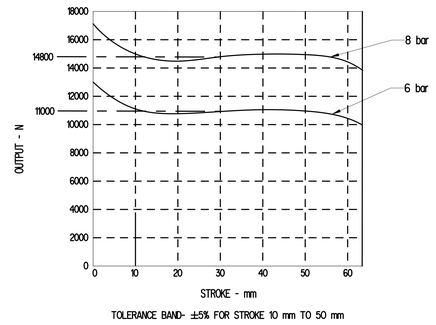

RETURN SPRING CHARACTERISTICS

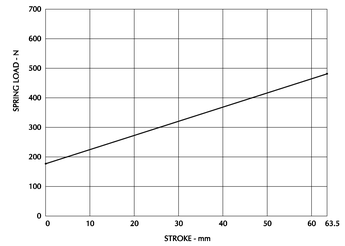

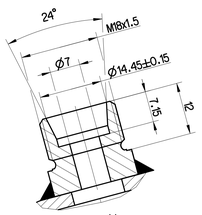

X
2:1

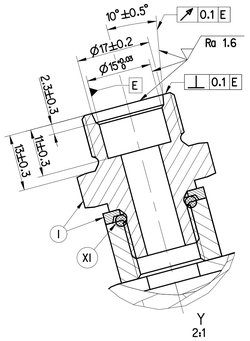

Y
2:1

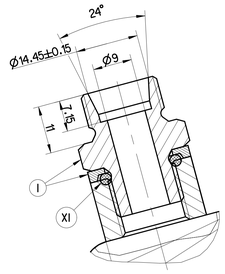

Z
2:1

ASSEMBLY PART NO.	PORT DETAILS	PRESSURE TEST CONNECTOR (1)	MASS (Kg)
423 107 037 0	BASIC DRAWING	NOT APPLICABLE	4.41
423 107 238 0	FIG T	NOT APPLICABLE	4.48
423 107 239 0	FIG U	APPLICABLE	4.53
423 107 240 0	FIG V	APPLICABLE	4.56

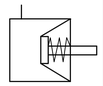

CIRCUIT DIAGRAM

1	PRODUCT FUNCTION AND RELIABILITY	
1.1	WORKING MEDIUM	AIR
1.2	NORMAL WORKING PRESSURE	8 bar
1.3	MAXIMUM WORKING PRESSURE	10 bar
1.4	STROKE	63.5 mm min.
1.5	THERMAL RANGE OF APPLICATION	-40°C TO +80°C
1.6	PRESSURE AT WHICH PUSH ROD STARTS MOVING (LIFT OFF PRESSURE AT 0 mm STROKE)	< 0.35 bar
1.7	PRESSURE AT WHICH PUSH ROD IS FULLY OUT (LIFT OFF PRESSURE AT 63.5 mm STROKE)	< 0.6 bar
1.8	CORROSION RESISTANCE	240 hours of NSS
2	MALE THREADS ARE FITTED WITH CLOSURE SLEEVE FOR STORAGE AND TRANSIT PURPOSE	
3	CLOSURE SLEEVE SHOULD BE KEPT IN THREADED PORT UNTIL THE HOSE ASSEMBLY CONNECTED TO THE THREADED PORT	

NOTE:
PRESSURE TEST CONNECTOR AS PER ISO 3583

DRAWING REDRAWN

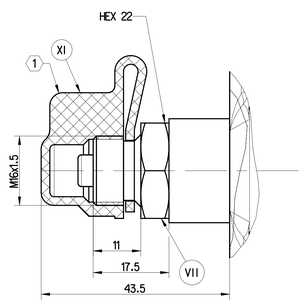

J
2:1

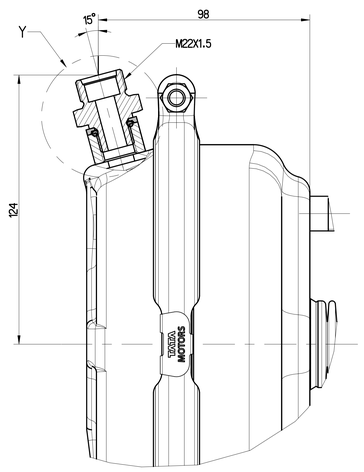

FIG T

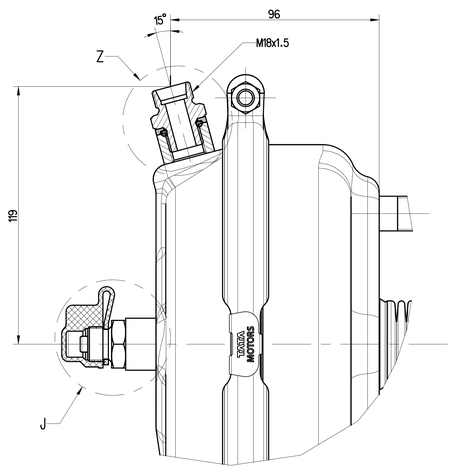

FIG U

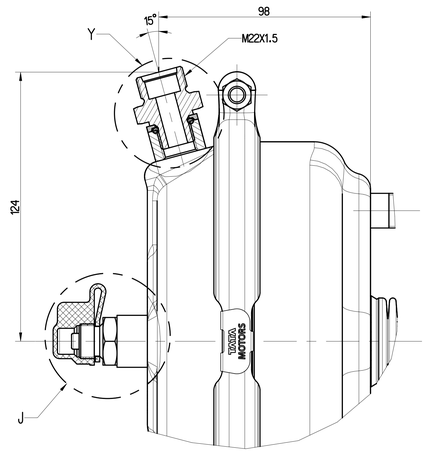

FIG V

PART CODE	MATERIAL	SURFACE PROTECTION
XVII	STEEL	NO TREATMENT
XVI	CAST IRON	PLATED
XV	CAST IRON	NO TREATMENT
XIV	STEEL	ZINC IRON PLATED
XIII	ZINC ALLOY	ANODISED
XII	PLASTIC	NO TREATMENT
XI	RUBBER	NO TREATMENT
X	STAINLESS STEEL	NO TREATMENT
IX	BRASS	NO TREATMENT
VIII	ZINC ALLOY	CHROMATED
VII	ALUMINIUM ALLOY	ANODISED
VI	ALUMINIUM ALLOY	CHROMATED
V	CAST IRON	PAINTED
IV	STEEL	POWDER COATED
III	STEEL	PAINTED
II	STEEL	PHOSPHATED
I	STEEL	ZINC PLATED

Todo Comercio y reproducción de su diseño, bajo expresa y comprobada de su consentimiento, así como cualquier otra información, que contenga este documento, se efectuará y contrato y cualquier consulta sobre a tres personas. Prohibida su reproducción y/o copia sin consentimiento de su autor. Nos reservamos el derecho de ejercer las acciones legales que procedan en caso de infracción.

Este documento contiene información de propiedad, bajo expresa y comprobada de su consentimiento, así como cualquier otra información, que contenga este documento, se efectuará y contrato y cualquier consulta sobre a tres personas. Prohibida su reproducción y/o copia sin consentimiento de su autor. Nos reservamos el derecho de ejercer las acciones legales que procedan en caso de infracción.

Copyright. This document and, being its others are the sole or exclusive property of the company, being its suitable without express consent, and being its others are the sole or exclusive property of the company, being its suitable without express consent, and being its others are the sole or exclusive property of the company, being its suitable without express consent, and