SURFACE PROTECT./OBERFL. SCHUTZ	
I	JED-240-3
II	JED-256-1
III	JED-371
IV	RUBBER / PLASTIC Ⓖ
V	MS
VI	JED-240-2

14H11 $^{+0.110}_{0}$

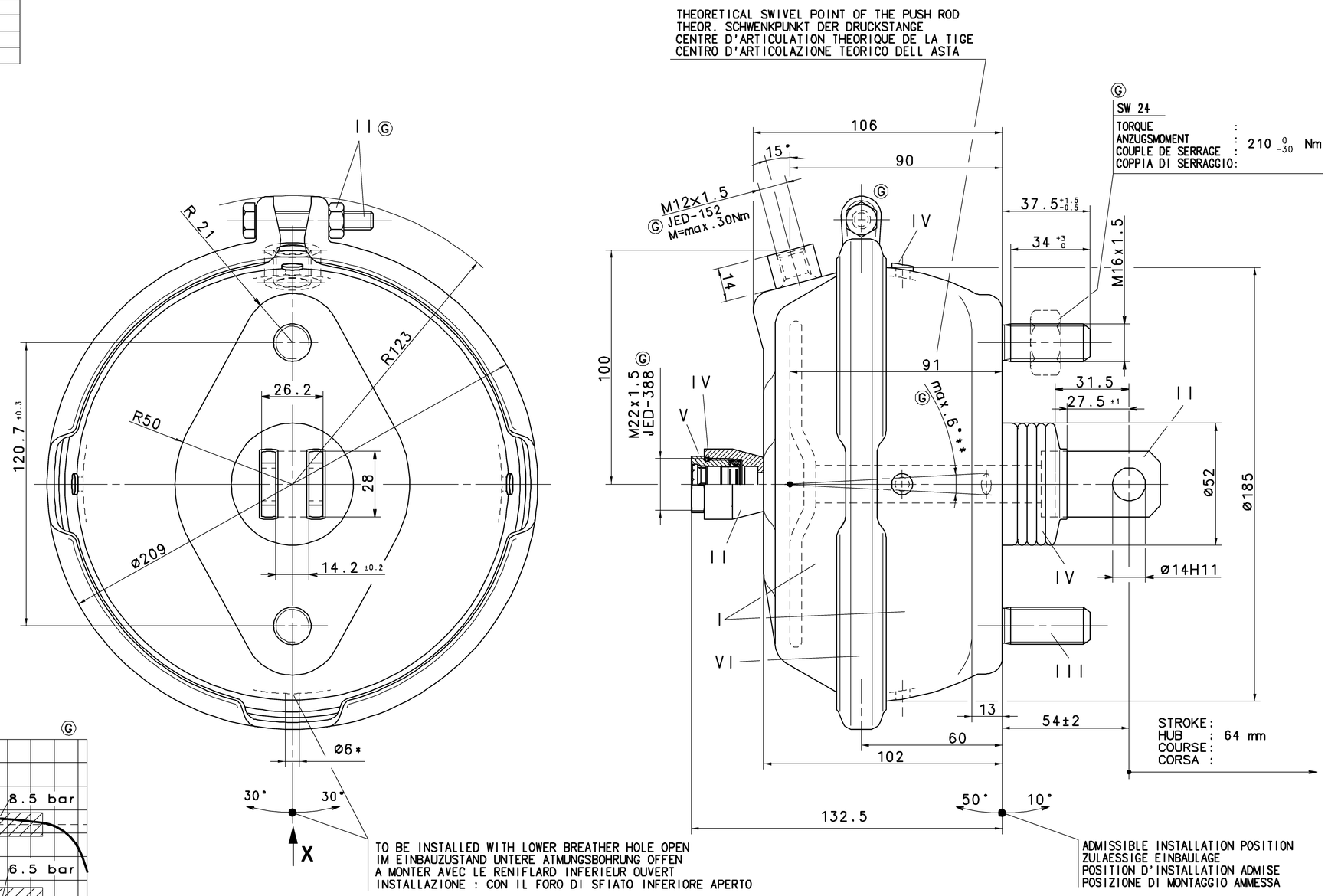

Ⓖ
WIDTH ACROSS FLATS
SW SCHLUESSELWEITE
SURPLATS
LARGHEZZA IN CHIAVE

FORCE OF RETURN SPRING :
RUECKSTELLKRAFT DER FEDER : 250 ±25 N
EFFORT DURESSORTDE RAPPEL :
FORZA DELLA MOLLA RITORNO :

THERMAL RANGE OF APPLICATION :
THERMISCHER ANWENDUNGSBEREICH : -40° C..+80° C
GAMME D'APPLICATION THERMIQUE :
CAMPO DI APPLICAZIONE TERMICA :

MEDIUM : AIR
MEDIUM : LUFT
FLUIDE : AIR
FLUIDO : ARIA

SERVICE PRESSURE :
BETRIEBSDRUCK : Pe max.=10.2bar
PRESSION DE SERVICE :
PRESSIONE DI ESERCIZIO :

(TEMPORARILY :
(KURZZEITIG : Pe max.= 13 bar
(DE COURTE DUREE :
(BREVE TEMPO SOLO :

**) DEFLECTION : AT STROKE
AUSLENKUNG : max.6° BEI HUB 0 mm
DEFLEXION : A COURSE
DEVIAZIONE : A CORSA

*) OPEN BREATHER HOLE
OFFEN ATMUNGSBOHRUNG
OUVERT TROU DE RENIFLANT
APERTO FORO RESPIRATORE

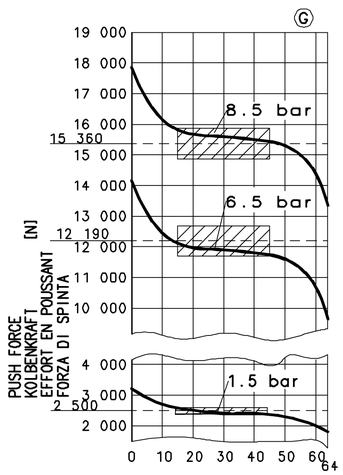

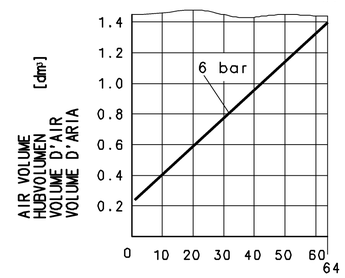

Ⓖ
DEAD VOLUME AT
TOTVOLUMEN BEI 0 bar:=0.085 dm³
VOLUME MORT A
SPAZIO NOCIVO A

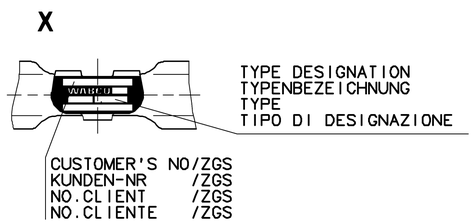

General Specification: JED-334-B						
Further Technical Data:						
Doc. Code:		Sheet:		To		
General Tolerances JED-261						
Range of Nominal Dimensions (± mm)						
Class	11	≤ 50	> 50 ≤ 180	> 180 ≤ 400	> 400	
Fine		0.5	1.0	1.5	2.0	
Medium	X	1.0	2.0	3.0	4.0	±3°
Coarse		2.0	3.5	5.0	6.5	
Topped Holes acc. JED-152 Ⓖ						
11 Tolerance Class Applied Crossmarked						

423 107 410 0 | A 007 420 97 24

WABCO | CUSTOMER'S NO. KUNDEN-NR. KZ No. CLIENT No. CLIENTE | AUSFUEHRUNG | ZGS | CAD Ⓖ

IDENTIFICATION

Copyright WABCO®

Date	Signature
Drawn 09-05-20	Kurek
Checked 09-05-20	Szuberski
Export	Szczupiak

WABCO Ⓖ

BRAKE CHAMBER
MEMBRANZYLINDER 30
VASE A DIAPHRAGME
BRAKE CHAMBER

Mass	Scale	Material No.	Date of first issue: 97-06-20
4.1 KG	1:1	423 107 410 0	Doc. Code Ⓖ / Language / Sheet: 005 ML 1/1
Size A 1	CAD System CCD	ECN-No. 121999 / Revision 14xG / Techn. Resp. 5340	Replacement for

100mm

Diese Unterlage ist urheberrechtlich geschützt. Jede Weitergabe an Dritte, sowie jede sonstige Verwendung ist ohne unsere vorherige schriftliche Zustimmung unzulässig.
Copyright of this document and drawing is the property of WABCO. Any use or communication of its contents thereof, are forbidden without a prior written authorization.
Questo documento è proprietà esclusiva della WABCO. Qualsiasi uso o comunicazione del suo contenuto, o parte di esso, è vietato senza il nostro consenso scritto.
Este documento es propiedad de WABCO. Cualquier uso o comunicación de su contenido, o parte de él, está prohibido sin nuestro consentimiento escrito.
Este documento é propriedade da WABCO. Qualquer uso ou comunicação do seu conteúdo, ou parte dele, está proibido sem o nosso consentimento escrito.
Ceci document est la propriété de WABCO. Toute utilisation ou communication de son contenu, ou de parties de celui-ci, est interdite sans notre consentement écrit.
Dit document is eigendom van WABCO. Elke ongeoorloofde toepassing of mededeling van de inhoud, of delen daarvan, is zonder onze schriftelijke toestemming verboden.