SURFACE PROTECTION OBERFLAECHERSCHUTZ		
SI.No.	JED	DESCRIPTION
I	JED-240-3	POWDER COATING
II	JED-256-1	ZINC ALLOY PASSIVATION
III	JED-371	PHOSPHATING
IV	JED-240-2	PAINT
V	-	PLASTIC

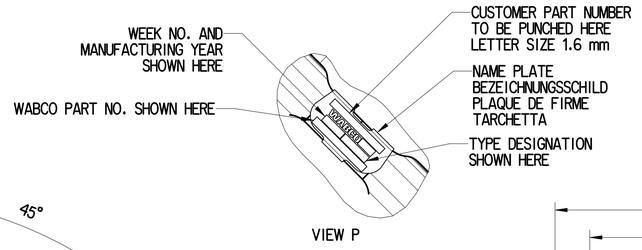

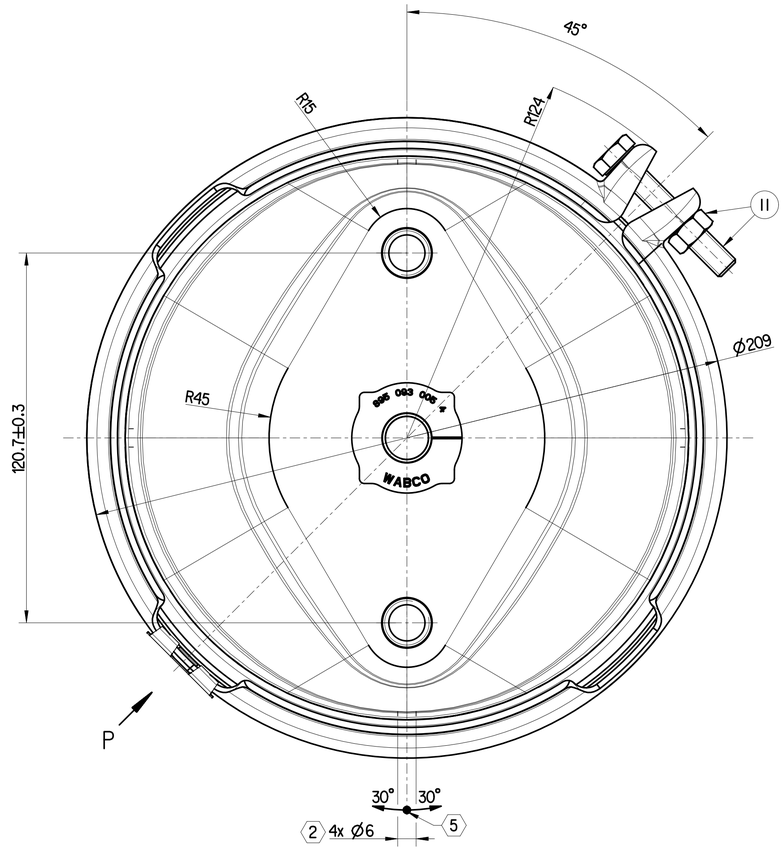

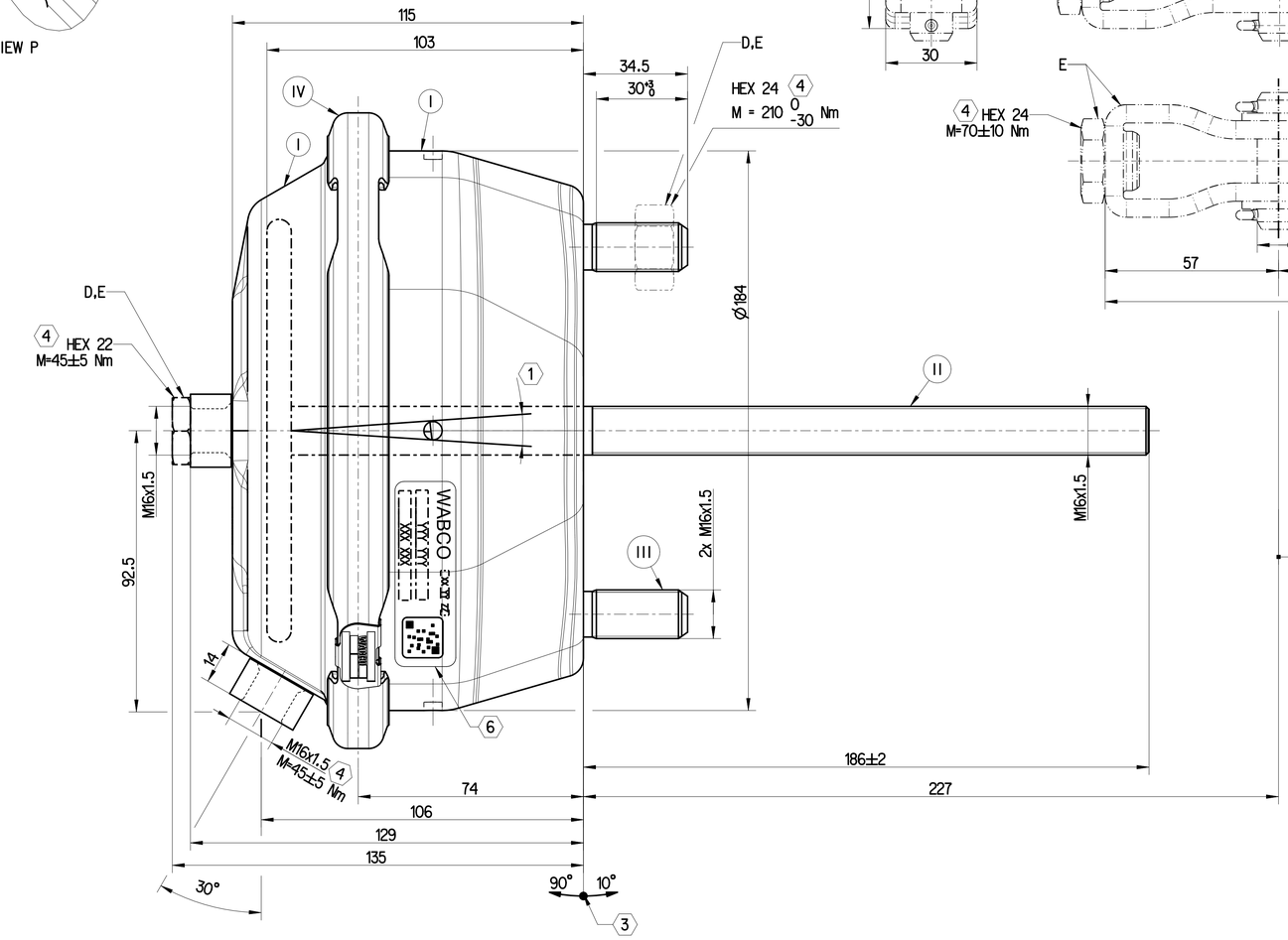

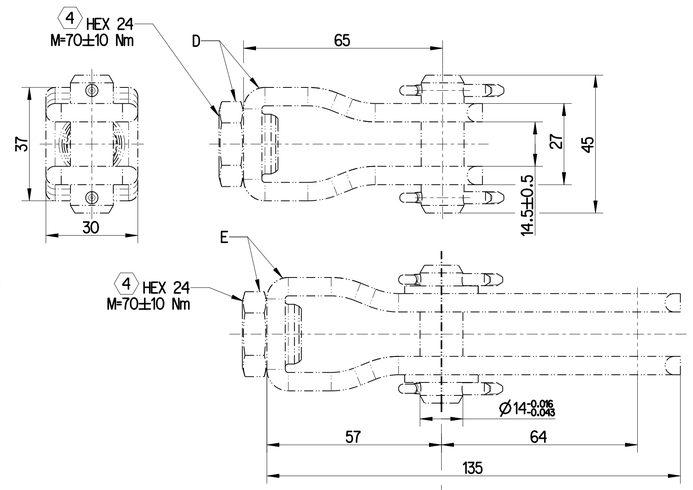

STROKE :
HUB : min. 75 mm
COURSE :
CORSA :

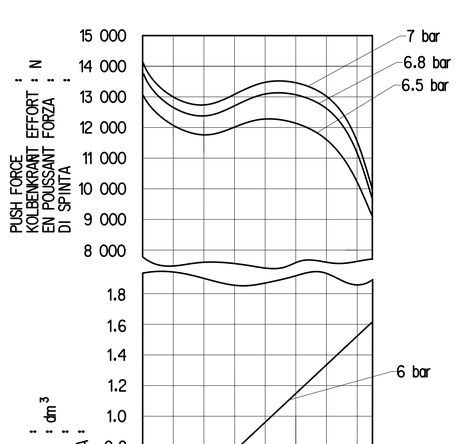

DEAD VOLUME AT
TOTVOLUMEN BEI 0 bar:=0.085 dm³
VOLUME MORT A
SPAZIO NOCIVO A

EXTERNAL STROKE LIMIT
EXTERNE HUBGRENZE
LIMITE DE COURSE EXTERNE
LIMITAZIONE DE CORSA ESTERNA

MIN. FORCE OF RETURN SPRING :
MIN. RUECKSTELLKRAFT DER FEDER :
EFFORT MINI. DU RESSORT DE RAPPEL : 150 N
FORZA MIN.DELLA MOLLA RITORNO :

THERMAL RANGE OF APPLICATION :
THERMISCHER ANWENDUNGSBEREICH :
GAMME D'APLICATION THERMIQUE : -40°C ..+80°C
CAMPO DI APPLICAZIONE TERMICA:

MEDIUM : AIR
MEDIUM : LUFT
FLUIDE : AIR
FLUIDO : ARIA

SERVICE PRESSURE :
BETRIEBSDRUCK :
PRESSION DE SERVICE : Pe max. = 8.5 bar
PRESSIONE DI ESERCIZIO :

(TEMPORARILY :
(KURZZEITIG : Pe max. = 10 bar)
(DE COURTE DUREE :
(BREVE TEMPO SOLO:

1 DEFLECTION:
AUSLENKUNG:
DEFLEXION : max. 6° AT STROKE / BEI HUB / A COURSE / A CORSA 0 mm
DEVIAZIONE:

2 OPEN BREATHER HOLE
OFTEN ATMUNGSBOHRUNG
OUVERT TROU RENIFLEUR
APERTO FORO RESPIRATORE

3 ADMISSEBLE INSTALLATION POSITION
ZULAESSIGE EINBAULAGE
POSITION D'INSTALLATION ADMISE
POSIZIONE DI MONTAGGIO AMMESSA

4 TORQUE
ANZUGSMOMENT
COUPLE DE SERRAGE
COPPIA DI SERRAGGIE

5 TO BE INSTALLED WITH THE BREATHER HOLE OPEN AT BOTTOM MOST POSITION
IM EINBAUZUSTAND UNTERE A ATMUNGSBOHRUNG OFFEN
A MONTER AVEC LE RENIFLARD INFERIEUR OUVERT
INSTALLAZIONE CON IL FORO DI SFIATOINFERIORE APERTO

6 IN THIS ZONE :
IN DIESEM BEREICH : DATA MATRIX CODE LABEL
DANS CETTE ZONE :
IN QUESTA ZON :

BY-PACKING:
BEIPACK: D 423 000 534 2 ON SPECIAL ORDER ONLY
PAQUET JOINT: E 423 000 535 2 NUR AUF BESTELLUNG
PACKO RIUNCHIUSO: SUR COMMANDE SEULEMENT
SU ORDINAZIONE SOLAMENTE

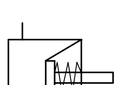

CIRCUIT DIAGRAM

JOST	JAS6010440024
CUSTOMER	CUSTOMER PART NUMBER

General Specification: ISO 8015, JED-334-1, Size ISO 14405 LP
Further Technical Data:4231078990
Doc. Code:035 Sheet: 1 To 5

General Tolerances JED-261

Range of nominal dimensions in mm					
Class 1)	≤ 50	> 50 ≤ 180	> 180 ≤ 400	> 400	
Fine	±0.5	±1	±1.5	±2	
Medium X	±1	±2	±3	±4	±3°
Coarse	±2	±3.5	±5	±6.5	

Tapped Holes acc.
1) Tolerance Class Applied Crossmarked

Copyright ZF®

Date	Signature
Drawn 2024-09-24	Ding
Checked 2024-09-24	Arangarasan

Dimensions in mm

BRAKE CHAMBER 30

Mass	Scale	Material No.	Date of first issue: 2024-09-24
4.42 kg	1:1	423 107 900 0	Doc.Code 005 / Language MIL / Sheet 1/1
Size A 1	CAD System CREO	ECN-No. 518061 / Revision 2 x F / Techn. Resp. 5340	Replacement for -

100mm

Toute Communication ou reproduction de ce document, toute exploitation ou communication de son contenu sont interdites, sauf autorisation écrite. Tous droits de propriété industrielle réservés, notamment en matière de brevets et de modèles.
Weitergabe sowie Vervielfältigung dieser Unterlage, Verwertung und Mitteilung ihres Inhalts nicht gestattet, soweit nicht ausdrücklich zugestanden. Zuwiderhandlungen verpflichten zu Schadenersatz. Alle Rechte für den Fall der Patenterteilung oder Gebrauchsmustereintragung vorbehalten.
Non è permesso consegnare o farli o riprodurre questo documento, né sfruttare il contenuto o renderlo comunque noto a terzi senza autorizzazione scritta. Tutti i diritti di proprietà industriale sono riservati, in particolare quello di brevetto o di registrazione di modello.
Copying of this document and giving it to others and the use or communication of the contents thereof, are forbidden without express authority. Offenders are liable to the payment of damages. All rights are reserved in the event of the grant of patent or registration of a utility model or design. This document is the subject of copyright.

dok-nr. 423 107 900 0 ... 005 / version: 2 x F / date: Date Revised: 4231079000 ... JAS