SURFACE PROTECT./OBERFL. SCHUTZ	
I	JED-240-3
II	JED-256-1
III	JED-371
IV	RUBBER/PLASTIC
V	MS
VI	JED-240-2

SERVICE PRESSURE :
BETRIEBSDRUCK : Pe max.= 10,2 bar
PRESSION DE SERVICE :
PRESSIONE DI ESERCIZIO :

(TEMPORARILY :
(KURZZEITIG : Pe max.= 13 bar
(DE COURTE DUREE :
(BREVE TEMPO SOLO :

FORCE OF RETURN SPRING :
RUECKSTELLKRAFT DER FEDER : 250 ±25 N
EFFORT DURESSORTDE RAPPEL :
FORZA DELLA MOLLA RITORNO :

THERMAL RANGE OF APPLICATION :
THERMISCHER ANWENDUNGSBEREICH : -40° C..+80° C
GAMME D'APPLICATION THERMIQUE :
CAMPO DI APPLICAZIONE TERMICA :

MEDIUM : AIR
MEDIUM : LUFT
FLUIDE : AIR
FLUIDO : ARIA

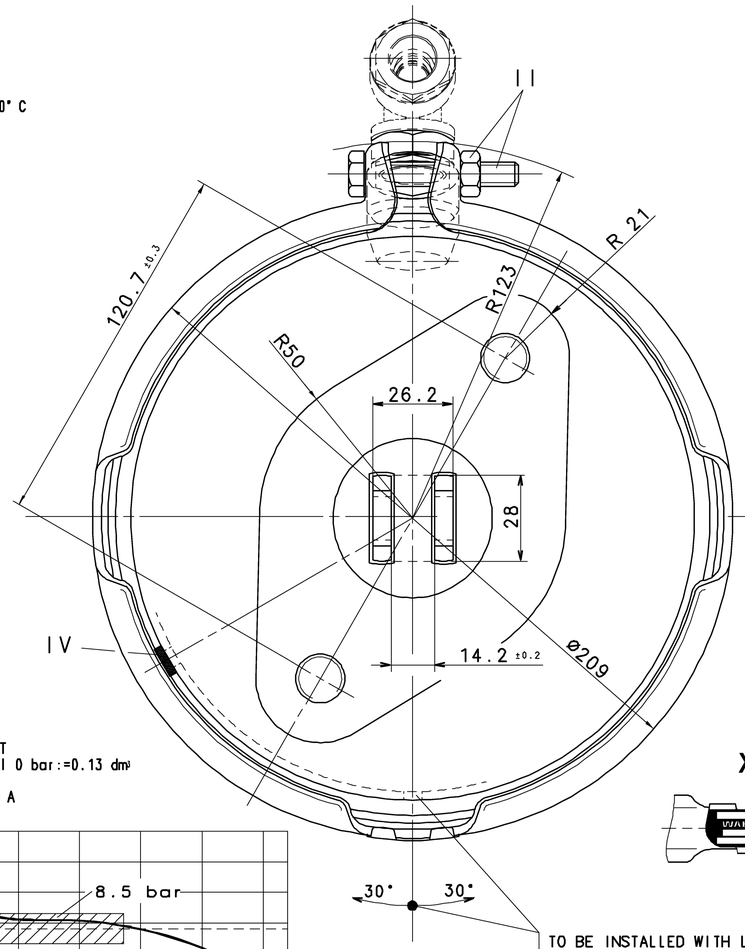

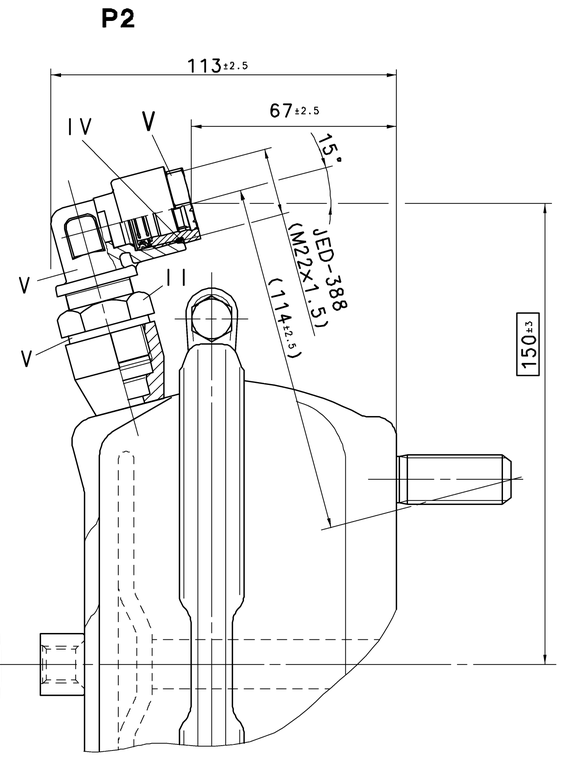

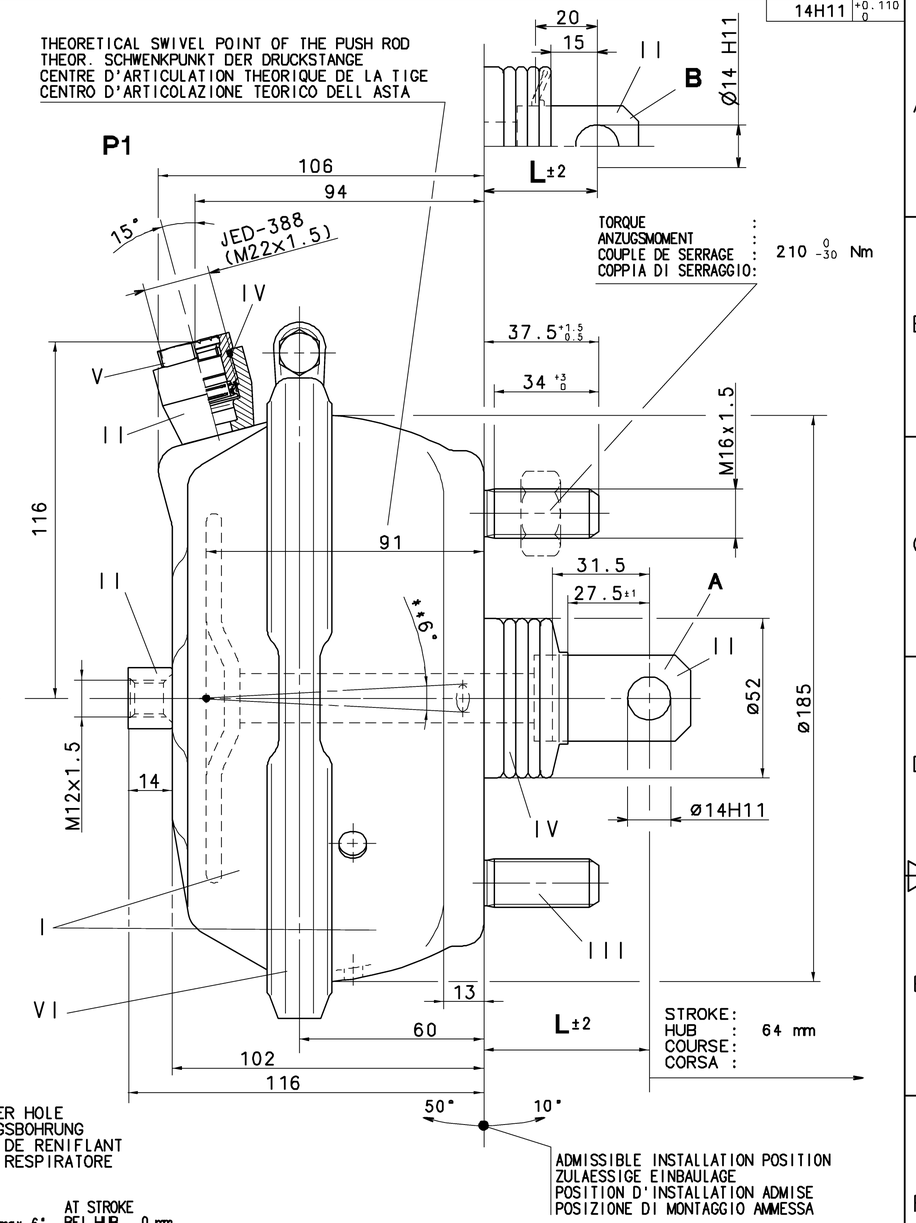

14H11 +0.110 0

DEAD VOLUME AT
TOTVOLUMEN BEI 0 bar:=0.13 dm³
VOLUME MORT A
SPAZIO NOCIVO A

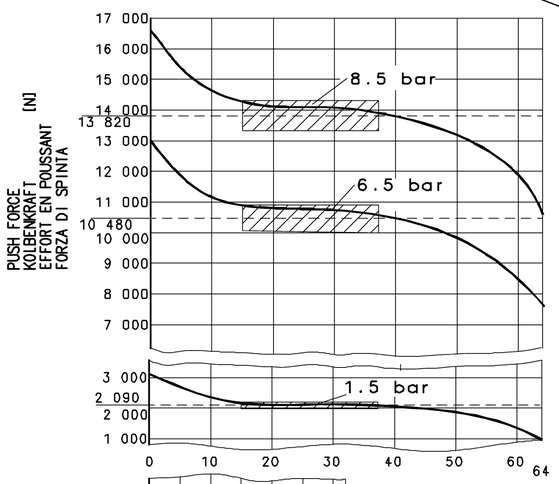

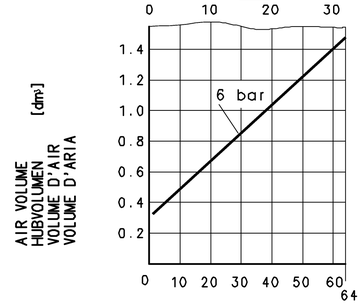

CUSTOMER'S NO/ZGS
KUNDEN-NR /ZGS
NO.CLIENT /ZGS
NO.CLIENTE /ZGS

X

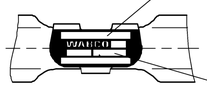

TYPE DESIGNATION
TYPENBEZEICHNUNG
TYPE
TIPO DI DESIGNAZIONE

TO BE INSTALLED WITH LOWER BREATHER HOLE OPEN
IM EINBAUZUSTAND UNTERE ATMUNGSBOHRUNG OFFEN
A MONTER AVEC LE RENIFLARD INFERIEUR OUVERT
INSTALLAZIONE : CON IL FORO DI SFIATO INFERIORE APERTO

*) OPEN BREATHER HOLE
OFFEN ATMUNGSBOHRUNG
OUVERT TROU DE RENIFLANT
APERTO FORO RESPIRATORE

**) DEFLECTION : AT STROKE
AUSLENKUNG : max.6° BEI HUB 0 mm
DEFLEXION : A COURSE
DEVIAZIONE : A CORSA

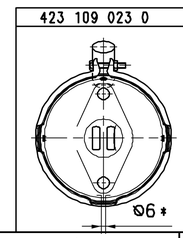

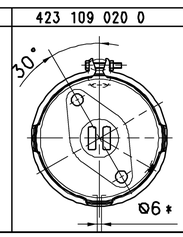

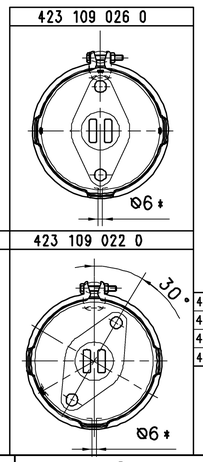

MAIN VIEWS REFER TO DIMENSIONS ONLY
HAUPTANSICHTEN BEZIEHEN SICH NUR AUF DIE ABMESSUNGEN
VUES PRINCIPALES CONCERNENT LES DIMENSIONS SEULEMENT
VISITE PRINSIPALI RIGUARDANO DIMENSIONI SOLAMENTE

POSITION OF COMPONENTS SEE REPRESENTATION OF VARIATIONS
POSITION DER BAUTEILE SIEHE ABWANDLUNGSDARSTELLUNGEN
POSITION DES COMOSANTS VOIR DESSIN DE LA VARINATE
POSIZIONE DELLE COMPONENTI VERDERE DISEGNO DI VARIANTE

IDENTIFICATION							DIMENSIONS			
WABCO	CUSTOMER'S NO. / KUNDEN-NR. KZ. / No. CLIENT / No. CLIENTE	AUSFUEHRUNG	ZGS	CAD	L mm	PORT / ANSCHLUSS / ORIFICE / ORIFICIO	YOKE / GABELKOPF / CHAPE / FORCELLA	WEIGHT / GEWICHT / POIDS / PESO kg
423 109 026 0	A 008 420 86 24		001	G	37	P1	B	3.6
423 109 023 0	A 007 420 90 24		001	G	37	P2	B	3.6
423 109 022 0	A 007 420 89 24	RE	001	G	54	P1	A	3.6
423 109 020 0	A 007 420 88 24	LI	001	G	54	P1	A	3.6

General Specification: JED-334-B
Further Technical Data:
Doc. Code: Sheet: To

General Tolerances JED-261

Class	11	Range of Nominal Dimensions (± mm) ≤ 50	> 50 ≤ 180	> 180 ≤ 400	> 400	∢
Fine		0.5	1.0	1.5	2.0	
Medium	X	1.0	2.0	3.0	4.0	±3°
Coarse		2.0	3.5	5.0	6.5	

Tapped Holes acc. JED-152 ; JED-388
11 Tolerance Class Applied Crossmarked

Copyright WABCO

Date	Signature
Drawn 08-12-09	Medynski
Checked 08-12-09	Szuberski
Expert	Szuberski

WABCO

BRAKE CHAMBER 27
MEMBRANZYLINDER
VASE A DIAPHRAGME
BRAKE CHAMBER

Mass	Scale	Material No.	Date of first issue: 97-02-07
KG	1:1	423 109 029 0	Doc.Code 053 / Language ML / Sheet 1/1
Size A 1	CAD System CCD	ECN-No. 119588 / Revision 2x0 / Techn. Resp. 5340	Replacement for

100mm

Tous droits de reproduction et de traduction réservés, notamment en vertu des droits de brevet ou de dépôt de modèle.

Copying of this document and giving it to others and the use or communication of the contents thereof, are forbidden without express authority. Offenders are liable to the payment of damages. All rights are reserved in the event of the grant of a patent or registration of a utility model or design.