ASSEMBLY PROCEDURE

(a)

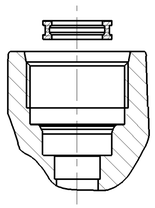

THE SPRING ELEMENT IS INSERTED INTO THE CHAMBER UNDER THE THREAD ROOT OF THE CONNECTION BORE (a) AND (b).

(b)

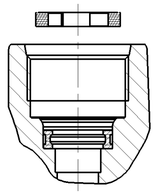

THE RETAINING CLIP IS INTRODUCED SO THAT IT RESTS FLAT ON THE THREAD ROOT (b) AND (c).

THE SPRING ELEMENT AND RETAINING CLIP ARE SYMMETRICAL.

(c)

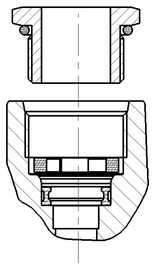

THE MALE FITTING PRE-ASSEMBLED WITH THE PRE-GREASED O-RING TO SEAL THE THREAD IS SCREWED BY HAND INTO THE TAPPED BORE (c) AND TIGHTENED.

DETAILS OF PORT MACHINING FOR M22x1.5

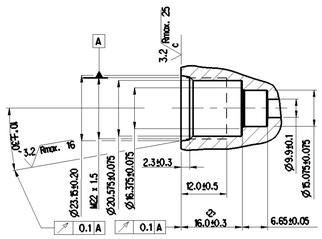

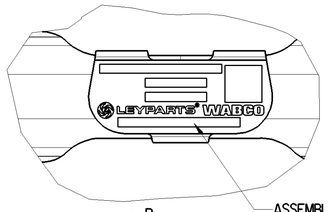

A P 2:1

ASSEMBLY No. AND BATCH No. ARE SHOWN HERE

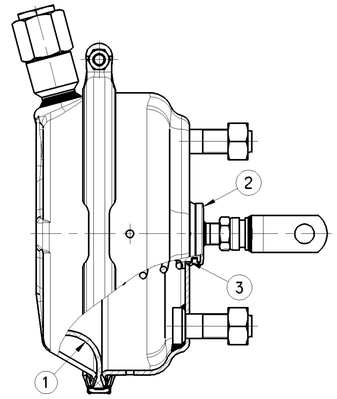

REPAIR KIT 300008106 (MSP 8/106) CONSISTS OF ITEMS MARKED

ITEM No.	WIN PART NO.	DESCRIPTION	QTY.
1	M870460	DIAPHRAGM	1
2	8977500754	GAITER	1
3	M275030	DUST SEAL	1

<1>	SAFETY CHARACTERISTICS	0
<2>	SIGNIFICANT CHARACTERISTICS	2

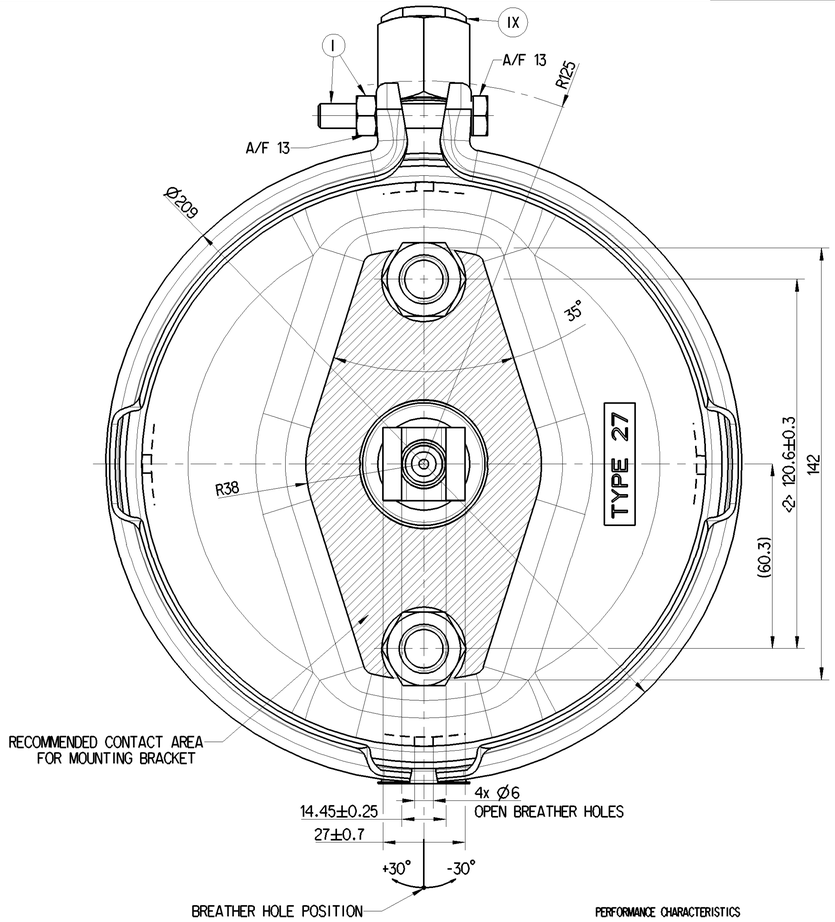

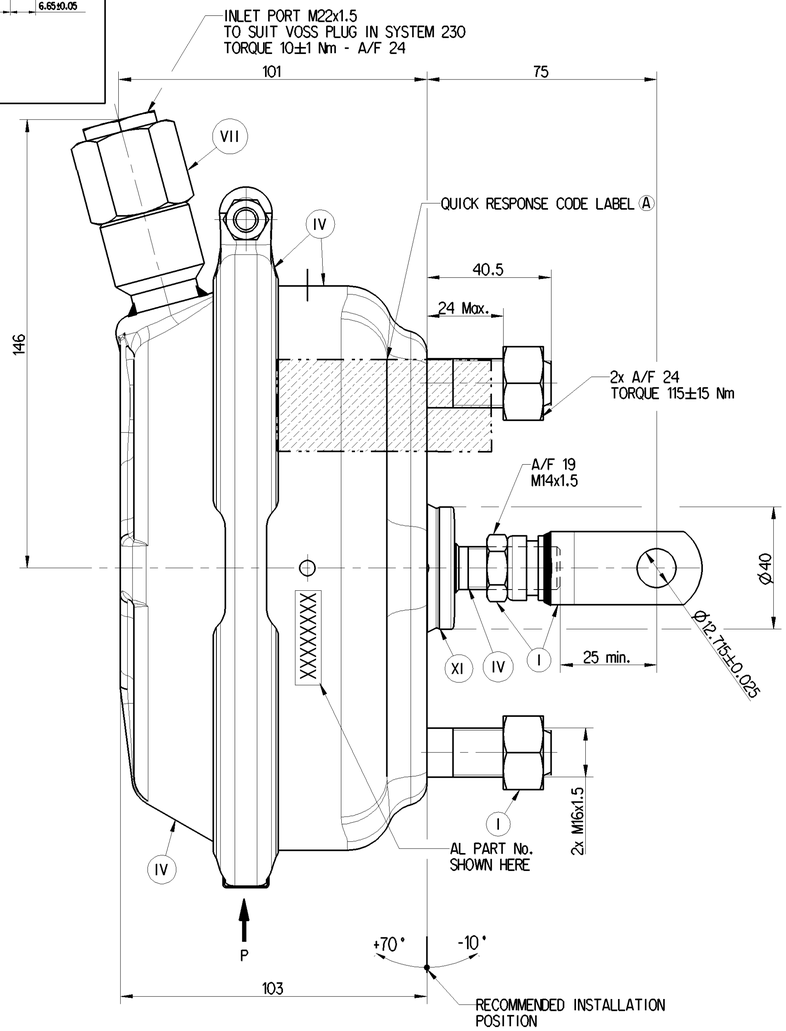

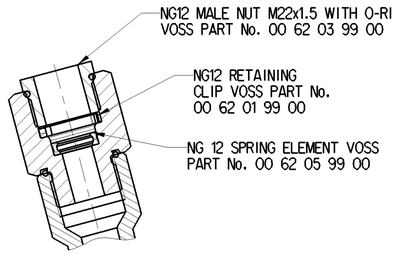

SL.NO	NOTES	
1	PRODUCT SPECIFICATION No	PS 423 109 028 0
1.1	WORKING MEDIUM	AIR
1.2	NORMAL WORKING PRESSURE	10 bar
1.3	MAXIMUM WORKING PRESSURE	13 bar
1.4	STROKE	63.5 mm MINIMUM
1.5	THERMAL RANGE OF APPLICATION	-40°C TO +80°C
1.6	PRESSURE AT WHICH PUSH ROD STARTS MOVING (LIFT-OFF PRESSURE AT 0 mm STROKE)	< 0.3 bar
1.7	PRESSURE AT WHICH PUSH ROD IS FULLY OUT (LIFT-OFF PRESSURE AT 63.5 mm STROKE)	< 0.5 bar
1.8	INNER DIAMETER OF THE CHAMBER	178 mm
2	CORROSION RESISTANCE 300 HOURS OF MINIMUM OF NSS IS APPLICABLE TO NON PRESSURE PLATE ASSEMBLY, PRESSURE PLATE ASSEMBLY AND CLAMP RING 240 HOURS OF MINIMUM OF NSS IS APPLICABLE TO FASTENERS, FORK ASSEMBLY, CLAMP RING BOLT/NUT AND PUSH ROD ASSMBLY	
3	QUALITY COMPLIANCE PLAN TESTS ARE CONDUCTED AS PER CLAUSE No.12 OF PS 423 109 028 0	
▲ 4	SERVICE LIFE TO FIRST OVERHAUL 2 YEARS/ 1,80,000 KM WHICHEVER IS EARILER FOR AIR DRYER OR DDU FITTED VEHICLE 1 YEAR/ 80,000 KM WHICHEVER IS EARILER FOR NON AIR DRYER OR DDU FITTED VEHICLE	
5	OPEN PORTS ARE FITTED WITH CLOSURE PLUG FOR STORAGE AND TRANSIT PURPOSE	

XVII	STEEL	NO TREATMENT
XVI	CAST IRON	PLATED
XV	CAST IRON	NO TREATMENT
XIV	STEEL	ZINC IRON PLATED
XIII	ZINC ALLOY	ANODISED
XII	PLASTIC	NO TREATMENT
XI	RUBBER	NO TREATMENT
X	STAINLESS STEEL	NO TREATMENT
IX	BRASS	NO TREATMENT
VIII	ZINC ALLOY	CHROMATED
VII	ALUMINIUM ALLOY	ANODISED
VI	ALUMINIUM ALLOY	CHROMATED
V	CAST IRON	PAINTED
IV	STEEL	POWDER COATED
III	STEEL	PAINTED
II	STEEL	PHOSPHATED
I	STEEL	ZINC PLATED
PART CODE	MATERIAL	SURFACE PROTECTION

PERFORMANCE CHARACTERISTICS

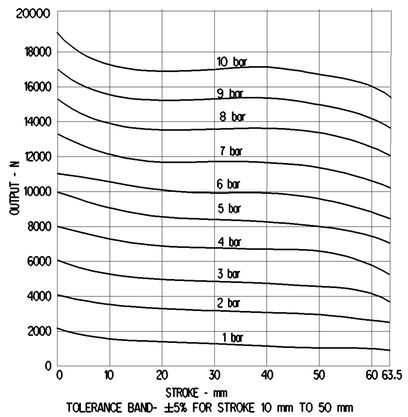

TOLERANCE BAND- ±5% FOR STROKE 10 mm TO 50 mm

RETURN SPRING CHARACTERISTICS

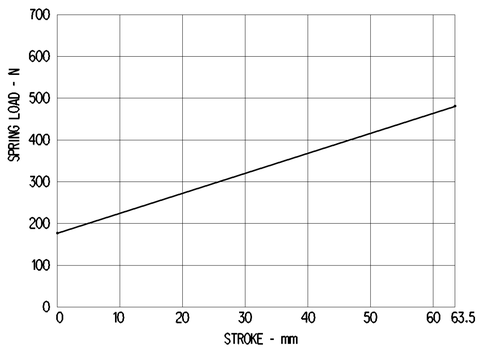

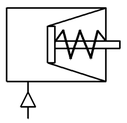

CIRCUIT DIAGRAM

▲ KEY INSTRUCTION

Ⓐ	CUSTOMER PART NUMBER	F8S01700

General Specification: JED-334-1 , Size ISO 14405 LP
Further Technical Data: PS 423 109 028 0
Doc. Code: 035 — Sheet: 1 To 4
General Tolerances JED-261

Class 1)	Range of Nominal Dimensions (± mm) ≤ 50	> 50 ≤ 180	> 180 ≤ 400	> 400	∢
Fine	0.5	1.0	1.5	2.0	
Medium X	1.0	2.0	3.0	4.0	±3°
Coarse	2.0	3.5	5.0	6.5	

Tapped Holes acc. JED-152
1) Tolerance Class Applied Crossmarked

Copyright WABCO®

Date	Signature
Drawn 2018-06-13	Swaminathan
Checked 2018-06-13	Senthilkumar
Expert Senthilkumar	

WABCO

BRAKE CHAMBER — TYPE 27

Mass	Scale	Material No.	Date of first issue: 2015-06-19
4.4 KG	1:1	423 109 072 0	Doc.Code 005 · Language EN · Sheet 1/1
Size A 1	CAD System CREO	ECN-No. 174380 · Revision 3 A · Techn. Resp. 5340_WIN	Replacement for /

100mm

Toute Communication ou reproduction de ce document, toute exploitation ou communication de son contenu sont interdites, sauf autorisation écrite. Tous droits de propriété industrielle réservés, notamment en matière de brevets et de modèles.
Weitergabe sowie Vervielfältigung dieser Unterlage, Verwertung und Mitteilung ihres Inhalts nicht gestattet, soweit nicht ausdrücklich zugestanden. Zuwiderhandlungen verpflichten zu Schadenersatz. Alle Rechte vorbehalten für Patent-, Gebrauchsmuster- oder Geschmacksmustereintragung.
Non è permesso consegnare o fare o riprodurre questo documento, né sfruttarne e comunicare a terzi il contenuto senza autorizzazione scritta. Tutti i diritti di proprietà industriale, quali i diritti derivanti da brevetti e modelli, sono riservati.
Copying of this document and giving it to others and the use or communication of the contents thereof, are forbidden without express authority. Offenders are liable to the payment of damages. All rights are reserved in the event of the grant of patent or registration of a utility model or design. This document is the subject of copyright.
E' proibito rilasciare a terzi questo documento e riprodurlo o trasmettere il suo contenuto senza esplicita autorizzazione. Sono riservati tutti i diritti di proprietà industriale, quali i diritti derivanti da brevetti o modelli.

Tous droits de propriété intellectuelle sur ce document, sous quelque forme que ce soit, et toute exploitation ou communication de son contenu sont interdites, sauf autorisation. Tous droits de propriété intellectuelle réservés, notamment en matière de brevets et de modèles.
Weitergabe sowie Vervielfältigung dieser Unterlage, Verwertung und Mitteilung ihres Inhalts nicht gestattet, soweit nicht ausdrücklich zugestanden. Zuwiderhandlungen verpflichten zu Schadensersatz. Alle Rechte für den Fall der Patent-, Gebrauchsmuster- oder Geschmacksmustereintragung vorbehalten.
Toute communication ou reproduction de ce document, tout usage fait en ce soit, et toute exploitation ou communication de son contenu sont interdites, sauf autorisation. Tous droits de propriété intellectuelle réservés, notamment en matière de brevets et de modèles.
Copying of this document and giving it to others and the use or communication of the contents thereof, are forbidden without express authority. Offenders are liable to the payment of damages. All rights reserved in the event of the grant of a patent, utility model or design.
Non è permesso consegnare a terzi o riprodurre questo documento, né utilizzare il contenuto o renderlo comunque noto a terzi senza esplicita autorizzazione. Ogni violazione comporta il risarcimento dei danni subiti. Sono riservati tutti i diritti derivanti dalla concessione di brevetti per modelli di utilità o modelli.
El texto íntegro o bien sólo el título derivado de la concesión de una patente, utilizacion o contenido o entrarlo conocer sin su toda exploitation o communication de son contenu sont interdites, sauf autorisation. Tous droits de propriété intellectuelle réservés, notamment en matière de brevets et de modèles.
Reproduzione e comunicazione a terzi di questo documento, utilizzo e comunicazione del suo contenuto non sono ammessi senza esplicita autorizzazione. Tutti i diritti di proprietà intellectuale sono riservati, in particolare quelli di brevetto e di modello.
Ceste, ali celotna vsebina ali samo del te-te, ne smejo biti posredovani ali kopirani, prav tako ne smejo biti izkoriščani ali sporočani drugim, kdor bi kaj takega počel, je dolžan izplačati odškodnino. Vse pravice, ki izhajajo iz podelitve patenta, koristnega vzorca ali industrijskega vzorca, so pridržane.
Tento dokument nesmí být bez našeho souhlasu jinému zpřístupněn ani jeho obsah využit k jakému jinému účelu. Porušení tohoto ustanovení zakládá povinnost k náhradě škody. Všechna práva vyplývající z udělení patentu, užitného vzoru nebo průmyslového vzoru jsou vyhrazena.
Tento dokument nesmie byť bez našej výslovnej zmluvy ani jeho obsah využiť k akému inému účelu. Porušenie tohoto ustanovenia zakladá povinnosť k náhrade škody. Všetky práva vyplývajúce z udelenia patentu, úžitkového vzoru alebo priemyselného vzoru sú vyhradené.
Tego dokumentu nie wolno bez naszej zgody ani jego treści wykorzystywać do innych celów. Naruszenie powyższego zobowiązuje do odszkodowania. Wszystkie prawa wynikające z udzielenia patentu, wzoru użytkowego lub wzoru przemysłowego są zastrzeżone.
Ez az okmány szerzői jogvédelem alatt áll, annak szabadalmi, szabadalmi bejelentési, szabadalmi szerzői jogvédelem alatt nem szabad felhasználni, illetve tartalmát harmadik fél rendelkezésére bocsátani. Minden