423 109 133 0 △4

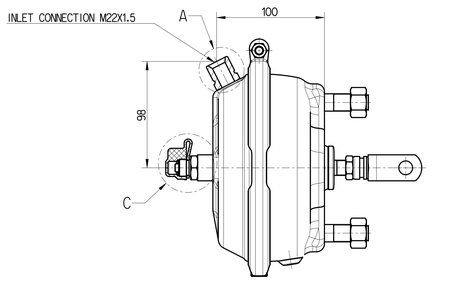

423 109 065 0 △4

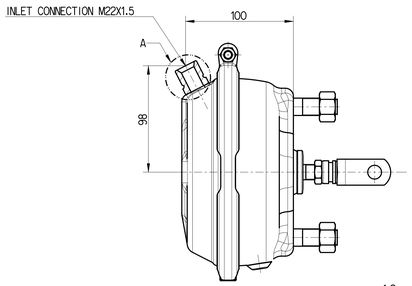

423 109 072 0 △4

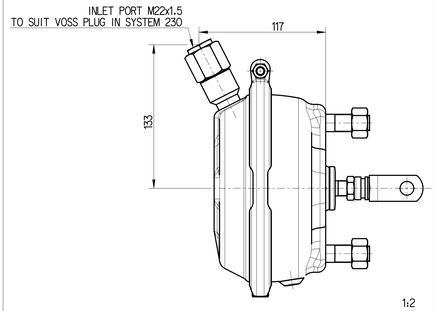

423 109 066 0 △4

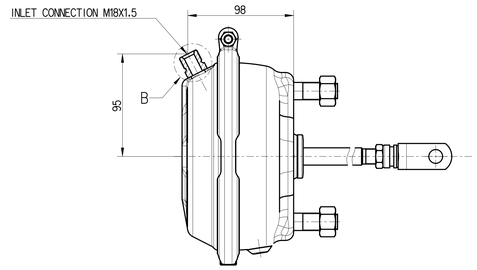

423 109 068 0 △4

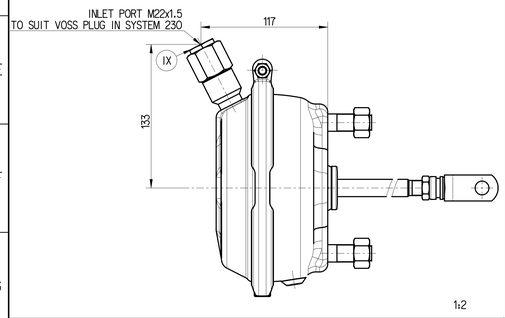

423 109 067 0 △4

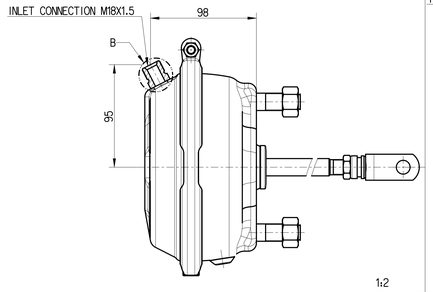

423 109 071 0 △4

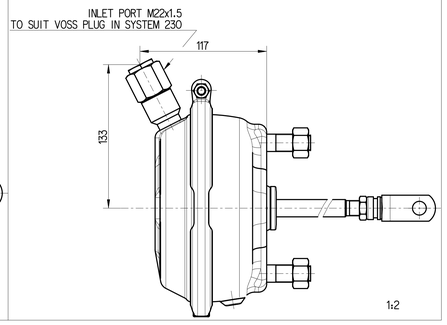

ASSEMBLY PROCEDURE

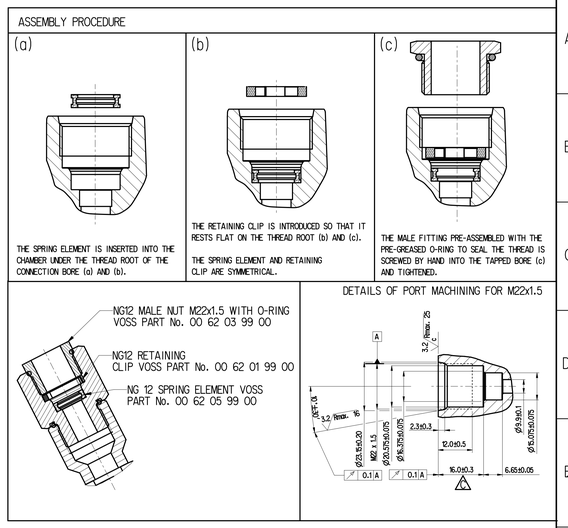

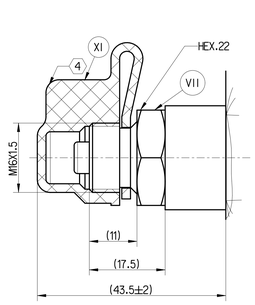

C
2:1

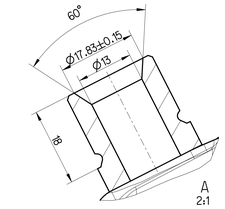

A
2:1

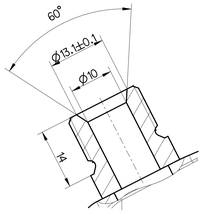

B △4
2:1

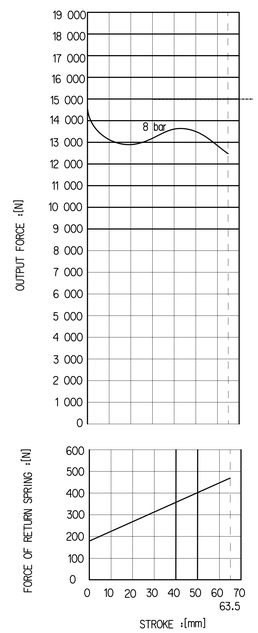

TOLERANCE BAND- ±5% FROM 1/3rd TO 2/3rd STROKE

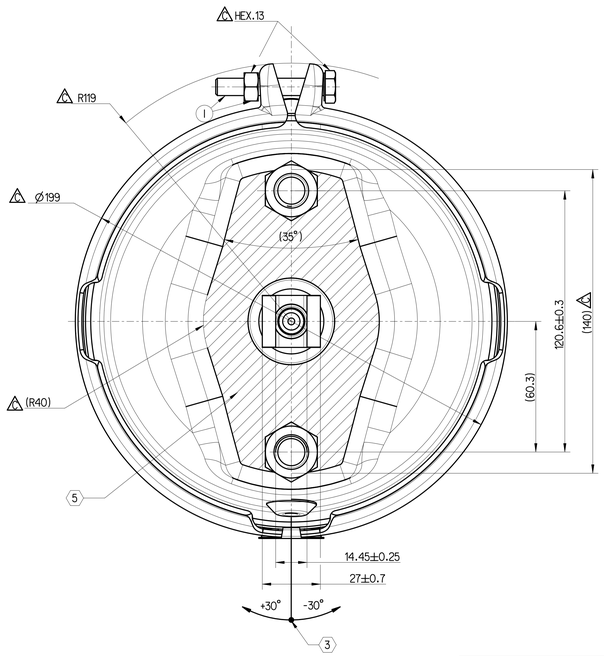

MAIN VIEWS REFER TO DIMENSIONS ONLY
(FOR ORIENTATION SEE RESPECTIVE VIEW)

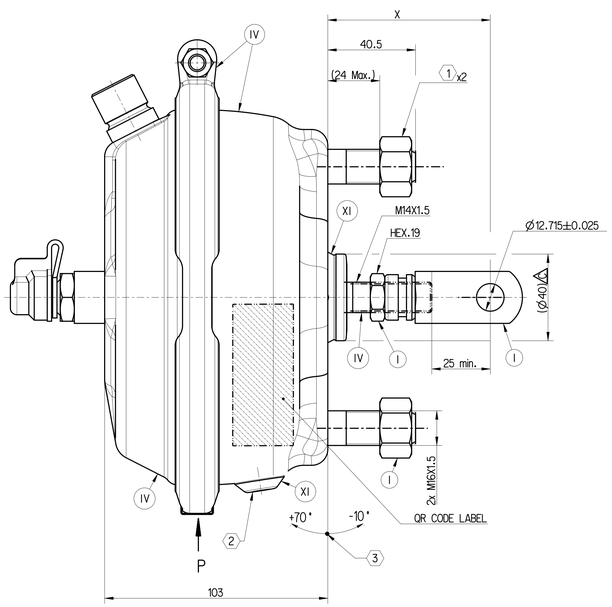

1	PRODUCT FUNCTION AND RELIABILITY	
1.1	PRODUCT SPECIFICATION No	PS 423 109 027 0
1.2	TYPE	27
1.3	STROKE	63.5 mm minimum
1.4	WORKING MEDIUM	AIR
1.5	NORMAL WORKING PRESSURE	10 bar
1.6	THERMAL RANGE OF APPLICATION	-40°C TO +80°C
1.7	PRESSURE AT WHICH PUSH ROD STARTS MOVING (LIFT-OFF PRESSURE AT 0 mm STROKE)	< 0.3 bar
1.8	PRESSURE AT WHICH PUSH ROD IS FULLY OUT (LIFT-OFF PRESSURE AT 63.5 mm STROKE)	< 0.5 bar
1.9	INNER DIAMETER OF THE CHAMBER	167 mm
1.10	CORROSION RESISTANCE 300 HOURS OF MINIMUM OF NSS IS APPLICABLE TO NON PRESSURE PLATE ASSEMBLY, PRESSURE PLATE ASSEMBLY AND CLAMP RING 240 HOURS OF MINIMUM OF NSS IS APPLICABLE TO FASTENERS, FORK ASSEMBLY, CLAMP RING BOLT/NUT AND PUSH ROD ASSMBLY	
2	QUALITY COMPLIANCE PLAN TESTS ARE CONDUCTED AS PER CLAUSE No.13 OF PS 423 109 027 0	
3 ▲	SERVICE LIFE TO FIRST OVERHAUL 2 YEARS/ 1,80,000 KM WHICHEVER IS EARILER FOR AIR DRYER OR DDU FITTED VEHICLE 1 YEAR/ 80,000 KM WHICHEVER IS EARILER FOR NON AIR DRYER OR DDU FITTED VEHICLE	
4	MALE THREAD IS TO BE FITTED WITH CLOSURE SLEEVE FOR STORAGE AND TRANSIT PURPOSE	
5	CLOSURE SLEEVE SHOULD BE KEPT IN THREADED PORT UNTIL THE HOSE ASSEMBLY CONNECTED TO THE THREADED PORT	

▲ KEY INSTRUCTION

CIRCUIT DIAGRAM

PART CODE	MATERIAL	
XVII	STEEL	NO TREATMENT
XVI	CAST IRON	PLATED
XV	CAST IRON	NO TREATMENT
XIV	STEEL	ZINC IRON PLATED
XIII	ZINC ALLOY	ANODISED
XII	PLASTIC	NO TREATMENT
XI	RUBBER	NO TREATMENT
X	STAINLESS STEEL	NO TREATMENT
IX	BRASS	NO TREATMENT
VIII	ZINC ALLOY	CHROMATED
VII	ALUMINIUM ALLOY	ANODISED
VI	ALUMINIUM ALLOY	CHROMATED
V	CAST IRON	PAINTED
IV	STEEL	POWDER COATED
III	STEEL	PAINTED
II	STEEL	PHOSPHATED
I	STEEL	ZINC PLATED

TRACEABILITY TO BE SHOWN HERE

VIEW P △4
1:1

1. HEX 24-FOR INSTALLATION
2. TO BE INSTALLED WITH CHECK VALVE AT THE BOTTOM
3. RECOMMENDED INSTALLATION POSITION
4. PRESSURE TEST CONNECTOR AS PER ISO 3583
5. RECOMMENDED CONTACT AREA FOR MOUNTING BRACKET

△4

423 109 072 0	75	~3.9
423 109 071 0	260	~4.2
423 109 068 0	247	~4.2
423 109 067 0	260	~4.1
423 109 066 0	247	~4.1
423 109 065 0	75	~3.8
423 109 133 0	75	~3.8
	STANDOUT (X)	MASS (kg)

General Specification: ISO 8015, JED-334-1, Size ISO 14405 LP
Further Technical Data: 423 109 133 0
Doc. Code: 035 — Sheet: 01 To 05
General Tolerances JED-261

Class	11	Range of nominal dimensions in mm ≤ 50	> 50 ≤ 180	> 180 ≤ 400	> 400	△4
Fine		±0.5	±1	±1.5	±2	±3°
Medium	X	±1	±2	±3	±4	
Coarse		±2	±3.5	±5	±6.5	

Tapped Holes acc. JED-152
11 Tolerance Class Applied Crossmarked

Copyright ZF®

Date	Signature
Drawn 2025-10-24	A Moorthy
Checked 2025-10-24	Arangarasan

Dimensions in mm

BRAKE CHAMBER TYPE 27

Mass	Scale	Material No.	Date of first issue: 2025-11-28		
SEE TABLE kg	1:1 (2:1,1:2)	423 109 133 0	Doc.Code 053	Language EN	Sheet 1/1
Size A0	CAD system CREO	ECN No. 521364 / Revision 17x C / Techn. Resp. 5340	Replacement for -		

100mm

This document is reproduced or distributed, its contents are not to be used for any purpose other than that for which it was originally issued, nor communicated to others. Our management is entitled to claim damages if any infringement of our rights occurs. Ce document ne peut ni être reproduit ni être diffusé, son contenu ne peut être utilisé à d'autres fins que celle pour laquelle il a été initialement émis, ni être communiqué à des tiers. Nous nous réservons le droit de demander des dommages-intérêts en cas de violation de nos droits. Este documento no puede ser reproducido ni difundido, su contenido no puede ser utilizado para otros fines que los que motivaron su emisión original, ni comunicado a terceros. Nos reservamos el derecho a reclamar daños y perjuicios en caso de violación de nuestros derechos. Questo documento non può essere riprodotto né diffuso, il suo contenuto non può essere utilizzato per scopi diversi da quelli per i quali è stato originariamente rilasciato, né comunicato a terzi. Ci riserviamo il diritto di richiedere il risarcimento dei danni in caso di violazione dei nostri diritti. Dit document mag niet worden gereproduceerd of verspreid, de inhoud ervan mag niet worden gebruikt voor andere doeleinden dan die waarvoor oorspronkelijk is uitgegeven, noch aan derden worden bekendgemaakt. Wij behouden ons het recht om schadevergoeding te eisen in geval van inbreuk op onze rechten. Este documento não pode ser reproduzido nem divulgado, o seu conteúdo não pode ser utilizado para outros fins que não aqueles para os quais foi originalmente emitido, nem comunicado a terceiros. Reservamo-nos o direito de reclamar indemnização em caso de violação dos nossos direitos. Denna handling får inte kopieras eller spridas, dess innehåll får inte användas för andra ändamål än de som det ursprungligen utfärdades för, eller delas med tredje part. Vi förbehåller oss rätten att begära skadestånd om våra rättigheter kränks. Dette dokument er ikke blot og bredt, dets indhold er ikke blot og bredt, og det er ikke blot og bredt ikke blot og bredt ikke blot og bredt. Vi forbehold os retten til at kræve erstatning i tilfælde af krænkelse af vores rettigheder. Tämä asiakirja ei saa monistaa eikä levittää, sen sisältöä ei saa käyttää muihin tarkoituksiin kuin siihen alkuperäisesti annettuihin, eikä sisältöä saa ilmaisemaan ulkopuolisille. Pidämme oikeuden vaatia korvausta, jos oikeuksiamme loukataan. Dokument nie może być powielany ani rozpowszechniany, jego treść nie może być wykorzystywana do celów innych niż pierwotnie wydane, ani ujawniana osobom trzecim. Zastrzegamy sobie prawo do dochodzenia roszczeń odszkodowawczych w przypadku naruszenia naszych praw. Dokument ten nie może być powielany ani rozpowszechniany, jego treść nie może być wykorzystywana do celów innych niż pierwotnie wydane, ani ujawniana osobom trzecim. Zastrzegamy sobie prawo do dochodzenia roszczeń odszkodowawczych w przypadku naruszenia naszych praw. Dokument ten nie może być powielany ani rozpowszechniany, jego treść nie może być wykorzystywana do celów innych niż pierwotnie wydane, ani ujawniana osobom trzecim. Zastrzegamy sobie prawo do dochodzenia roszczeń odszkodowawczych w przypadku naruszenia naszych praw.