| SURFACE PROTECTION | | |
|---|---|---|
| Sl.No. | JED | DESCRIPTION |
| I | JED-240-3 | POWDER COATING |
| II | JED-739-3 | ZINC NICKEL PASSIVATION |
| III | JED-371 | PHOSPATING AND OILING |
| IV | - | RUBBER/PLASTIC |
| V | JED-240-1 | PAINTING |
| VI | - | BRASS |

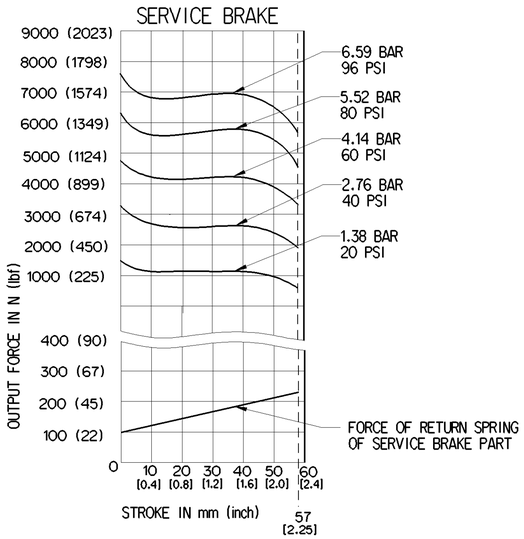


GRAPHS FOR INFORMATION ONLY

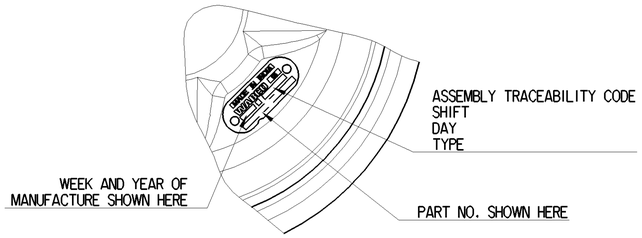


VIEW P

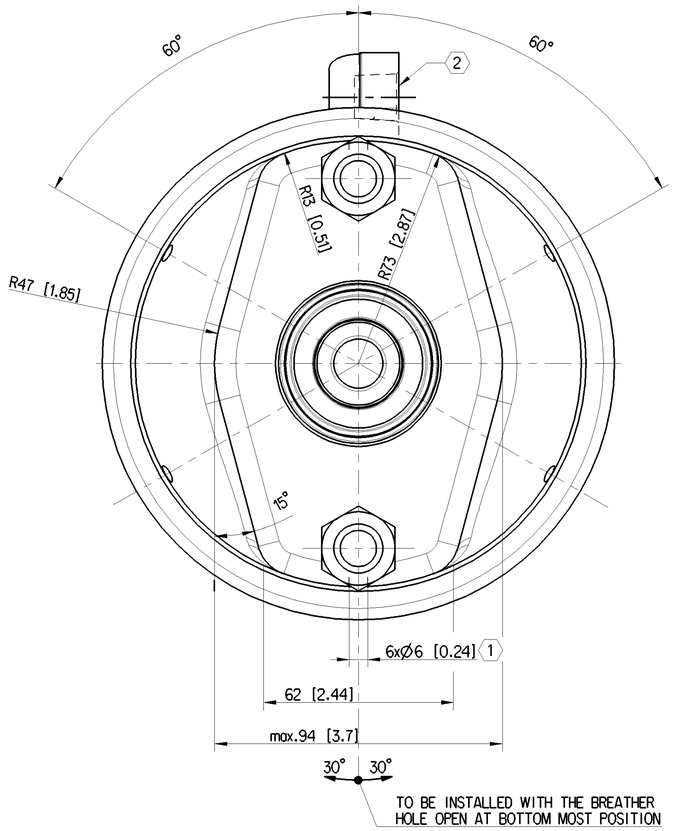


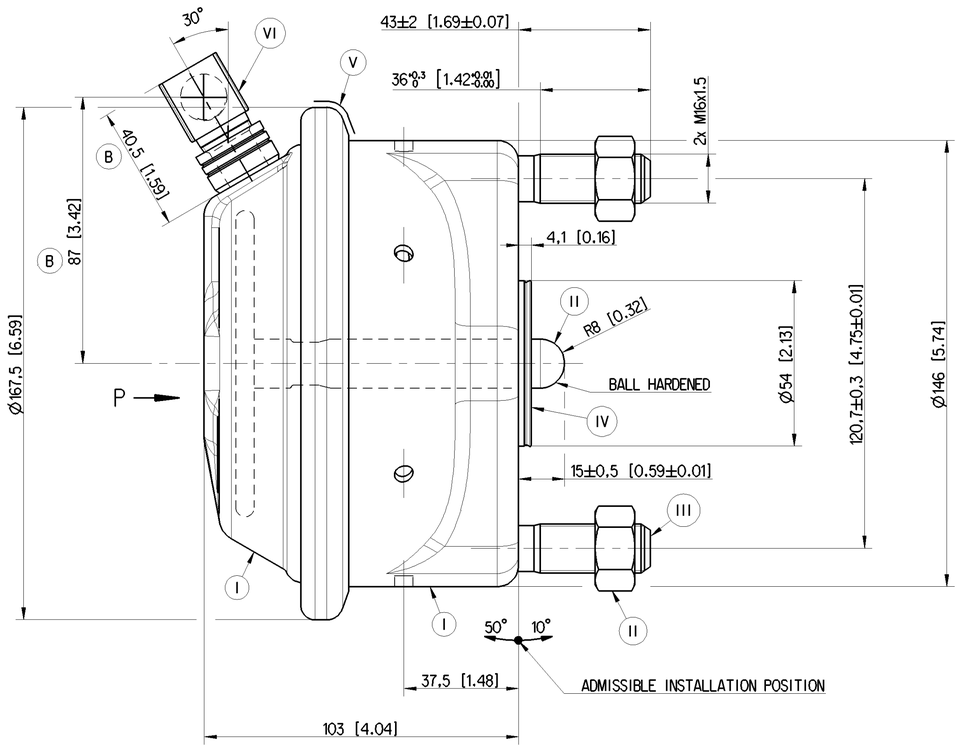


1 OPEN BREATHER HOLE

2 3/8"-18 NPTF (JED-686)

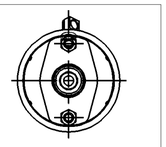

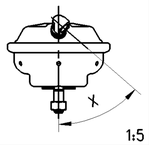


1:5

| | | |
|---|---|---|
| 423 504 075 0 | 0° | 270° |
| 423 504 074 0 | 0° | 90° |
| WABCO PART No. | SIDE PORT POSITION | SIDE PORT FITTING POSITION (X) |

B

[..] DIMENSION IN INCHES

| SL.No. | NOTES | |
|---|---|---|
| 1.1 | WORKING MEDIUM | AIR |
| 1.2 | WORKING PRESSURE | 8 bar (116 PSI) |
| 1.3 | MAXIMUM PRESSURE (TEMPORARILY) | 10 bar (145 PSI) |
| 1.4 | STROKE | 57 mm MINIMUM (2.25" MINIMUM) |
| 1.5 | PRESSURE AT WHICH PUSH ROD STARTS MOVING (LIFT OFF PRESSURE-0mm STROKE) | < 0.35 bar < (5.08 PSI) |
| 1.6 | PRESSURE AT WHICH PUSH ROD IS FULLY OUT (LIFT OFF PRESSURE-64mm STROKE) | < 0.5 bar < (7.25 PSI) |
| 1.7 | THERMAL RANGE OF APPLICATION | -40°C TO +80°C (-40°F TO +176°F) |
| 1.8 | MALE THREADS TO BE PROTECTED AND OPEN PORTS TO BE FITTED WITH CLOSURE PLUG TO AVOID TRANSIT DAMAGE | |

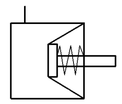

CIRCUIT DIAGRAM

General Specification: JED-334-1 , Size ISO 14405 LP
Further Technical Data: 423 505 056 0
Doc. Code: 035 Sheet: 1 To 5

General Tolerances JED-261

| Class 1) | Range of Nominal Dimensions ( ± mm) ≤ 50 | > 50 ≤ 180 | > 180 ≤ 400 | > 400 | |
|---|---|---|---|---|---|
| Fine | 0.5 | 1.0 | 1.5 | 2.0 | ±3° |
| Medium X | 1.0 | 2.0 | 3.0 | 4.0 | |
| Coarse | 2.0 | 3.5 | 5.0 | 6.5 | |

Tapped Holes acc. JED-686
1) Tolerance Class Applied Crossmarked

Copyright WABCO®

| Date | Signature |
|---|---|
| Drawn 2021-08-11 | S J |
| Checked 2021-08-12 | Senthilkumar |
| Expert Senthilkumar | |

WABCO

BRAKE CHAMBER - TYPE 16

| Mass | Scale | Material No. | Date of first issue: 2020-06-17 | |
|---|---|---|---|---|
| -3.0 KG | 1:1 (1:5) | 423 504 074 0 | Doc.Code 053 | Language EN / Sheet 1/1 |
| Size A 1 | CAD System CREO | | | |

| ECN-No. | Revision | Techn. Resp. | Replacement for |
|---|---|---|---|
| 508827 | 3x B | 5350 | - |

100mm

Toute Communication ou reproduction de ce document, toute exploitation ou communication de son contenu sont interdites, sauf autorisation écrite. Tous droits de propriété industrielle réservés, notamment en matière de brevets et de modèles.

Non è permesso consegnare o farci o riprodurre questo documento, né utilizzare il contenuto o renderlo comunque noto a terzi senza autorizzazione scritta. Tutti i diritti di proprietà industriale sono riservati, in particolare quelli di brevetto e di modello.

Weitergabe sowie Vervielfältigung dieser Unterlage, Verwertung und Mitteilung ihres Inhalts nicht gestattet, soweit nicht ausdrücklich zugestanden. Zuwiderhandlungen verpflichten zu Schadenersatz. Alle Rechte für den Patent- Gebrauchsmuster- oder Geschmacksmustertitel vorbehalten.

Copying of this document and giving it to others and the use or communication of the contents thereof, are forbidden without express authority. Offenders are liable to the payment of damages. All rights are reserved in the event of the grant of patent or registration of a utility model or design. This document is the subject of copyright.