SURFACE PROTECT./OBERFL. SCHUTZ	
I	JED-240-3
II	JED-256-1
III	JED-371
IV	RUBBER/PLASTIC
V	JED-240-2

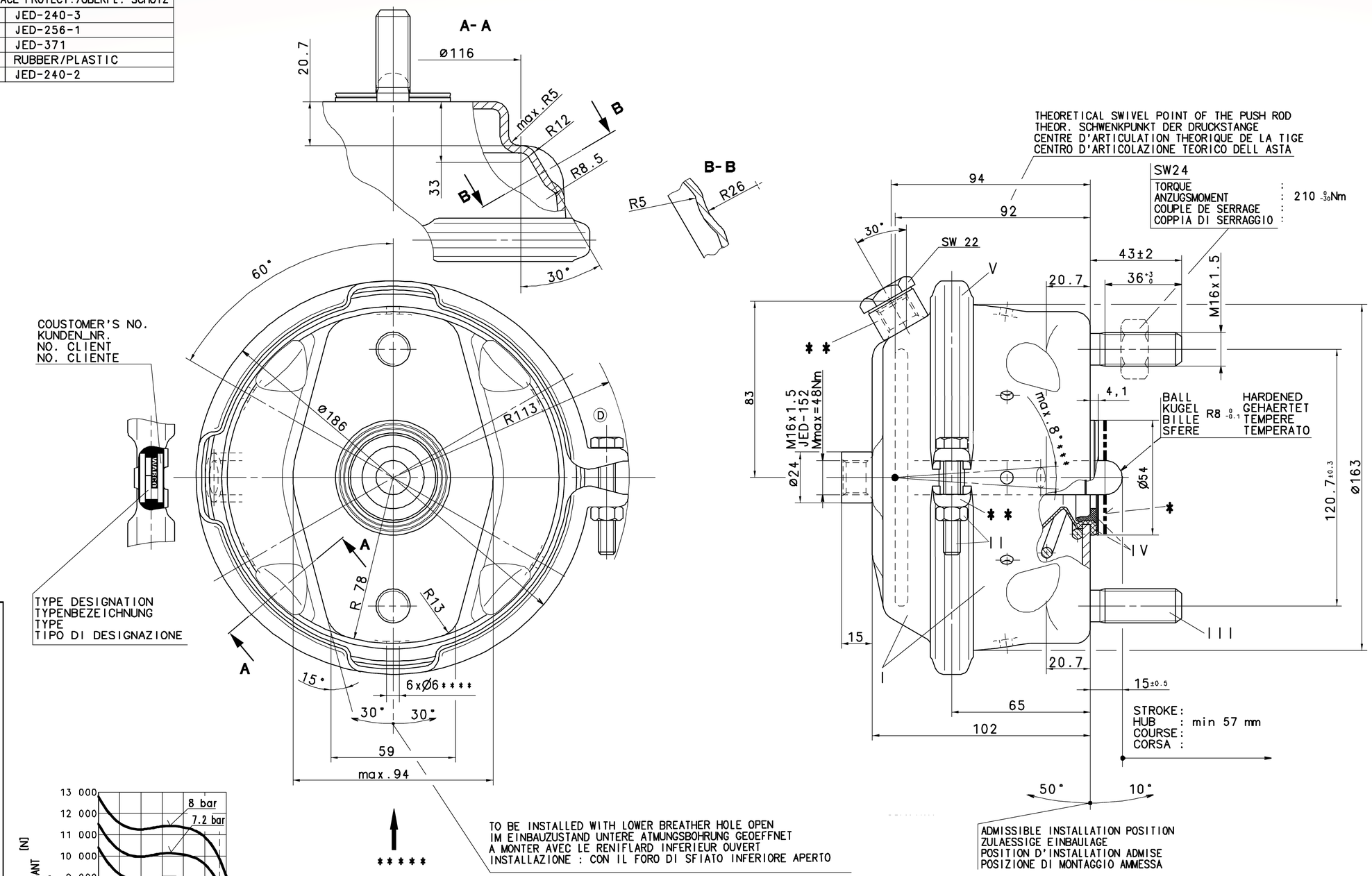

*) SEALING SURFACE
DICHTFLAECHE
SURFACE D' ETANCHEITE
SUPERFICI DI TENUTA

* *) OUT OF PLANE
VERSETZT GEZEICHNET
AU DEHORS DU PLAN DE PROJECTION
AL DI FUORI DEL PIANO DI PROIEZIONE

* * *) DEFLECTION: AT STROKE
AUSLENKUNG: max.8° BEI HUB 0 mm
DEFLEXION : A COURSE
DEVIAZIONE: A CORSA

SW= WIDTH ACROSS FLATS
SCHLUESSELWEITE
SURPLATS
LARGHEZZA IN CHIAVE

* * * *) 6 OPEN BREATHER HOLE :
6 OFFEN ATMUNGSBOHRUNG :ø6
6 OUVERT TROU RENIFLEUR :
6 APERTO FORO RESPIRATORE:

Ⓓ * * * * *) REFER THIS VIEW FOR SUPPLY CONDITION
IN DIESER ANSICHT FINDEN SIE DIE LIEFERBEDINGUNG.
REPORTEZ-VOUS À CETTE VUE POUR CONNAÎTRE L'ÉTAT DE L'APPROVISIONNEMENT.
FARE RIFERIMENTO A QUESTA VISTA PER LE CONDIZIONI DI FORNITURA

THERMAL RANGE OF APPLICATION :
THERMISCHER ANWENDUNGSBEREICH : -40 °C..+80 °C
GAMME D'APPLICATION THERMIQUE :
CAMPO DI APPLICAZIONE TERMICA :

MEDIUM : AIR
MEDIUM : LUFT
FLUIDE : AIR
FLUIDO : ARIA

SERVICE PRESSURE :
BETRIEBSDRUCK : Pe max.= 10.2 bar
PRESSION DE SERVICE :
PRESSIONE DI ESERCIZIO :

(TEMPORARILY :
(KURZZEITIG : Pe max.= 13 bar)
(DE COURTE DUREE :
(BREVE TEMPO SOLO :

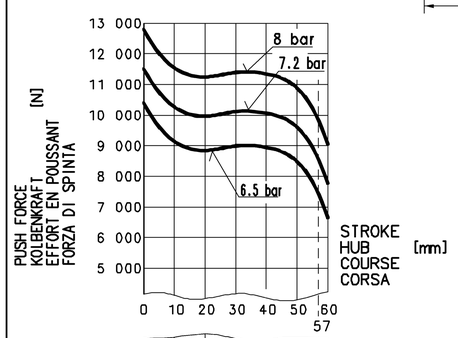

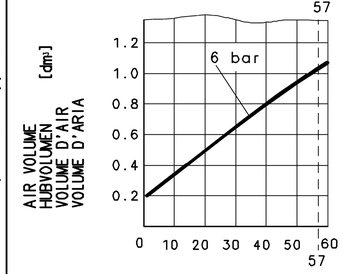

DEAD VOLUME AT
TOTVOLUMEN BEI 0 BAR:=0.07 dm³
VOLUME MORT A
SPAZIO NOCIVO A

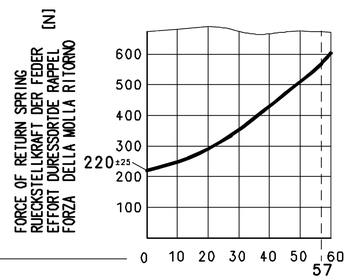

423 506 002 0	4.454.1069.00
WABCO	CUSTOMER'S NO. KUNDEN-NR. No. CLIENT No. CLIENTE
IDENTIFICATION	

General Specification: JED-334-0					
Further Technical Data:					
Doc. Code:		Sheet:	To		
General Tolerances JED-261					
	Range of Nominal Dimensions (± mm)				
Class 1)	≤ 50	> 50 ≤ 180	> 180 ≤ 400	> 400	∢
Fine	0.5	1.0	1.5	2.0	
Medium X	1.0	2.0	3.0	4.0	±3°
Coarse	2.0	3.5	5.0	6.5	
Topped Holes acc. JED-152					
1) Tolerance Class Applied Crossmarked					

Copyright WABCO®

Date	Signature
Drawn	
22-08-05	GOPINATH
Checked	
22-08-05	SENTHILKUMAR
Export	
SENTHILKUMAR	

WABCO

BRAKE CHAMBER 24
MEMBRANZYLINDER
VASE A DIAPHRAGME
BRAKE CHAMBER

Mass	Scale	Material No.	Date of first issue: 99-12-15		
3.0 KG	1:1	423 506 002 0	Doc.Code 005	Language ML	Sheet 1/1
Size A 1	CAD System CCD	ECN-No. 509029	Revision 2x D	Techn. Resp. 5350	Replacement for

100mm

Neue Commercial Union ist ein Unternehmen der Allianz Versicherungs-Aktiengesellschaft.