SURFACE PROTECTION		
I	JED-240-3	POWDER COATING
II	JED-739-3	ZINC NICKEL PASSIVATION
III	JED-371	PHOSPATING AND OILING
IV	-	RUBBER/PLASTIC
V	JED-240-1	PAINTING
VI	-	BRASS

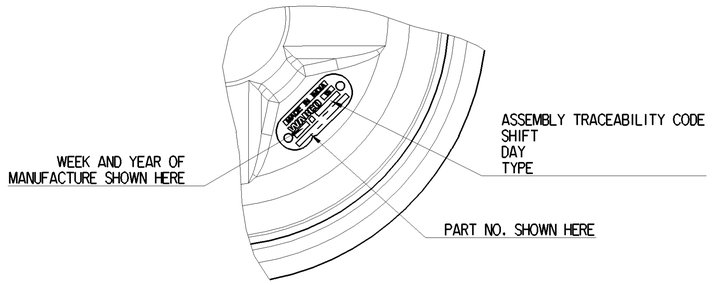

VIEW P

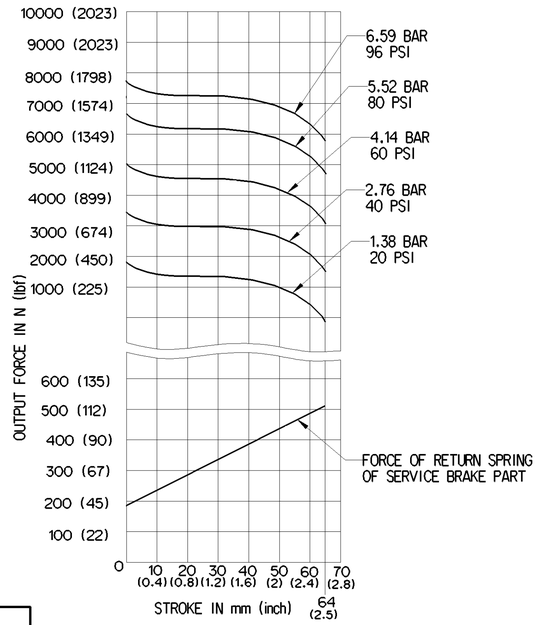

GRAPHS FOR INFORMATION ONLY

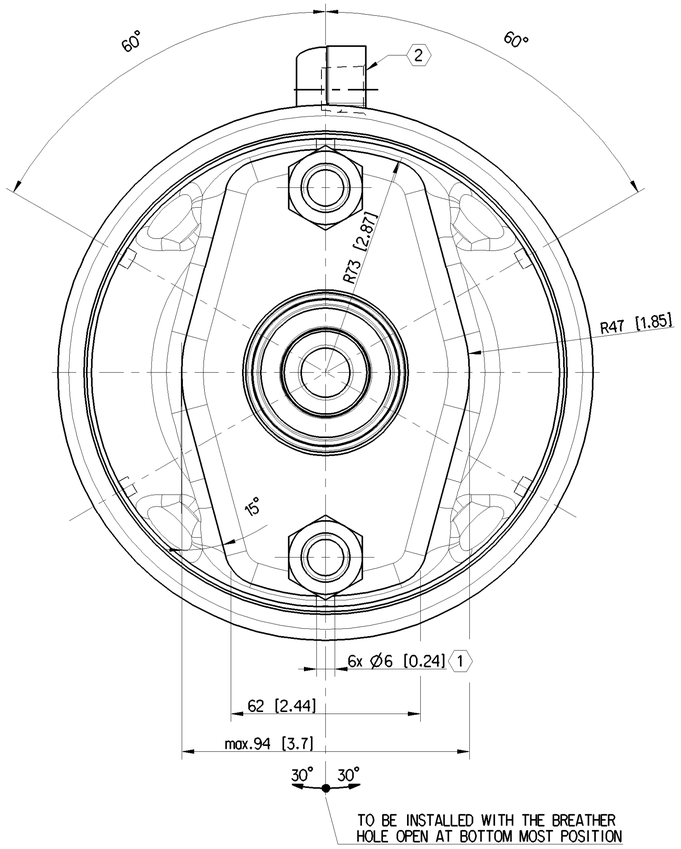

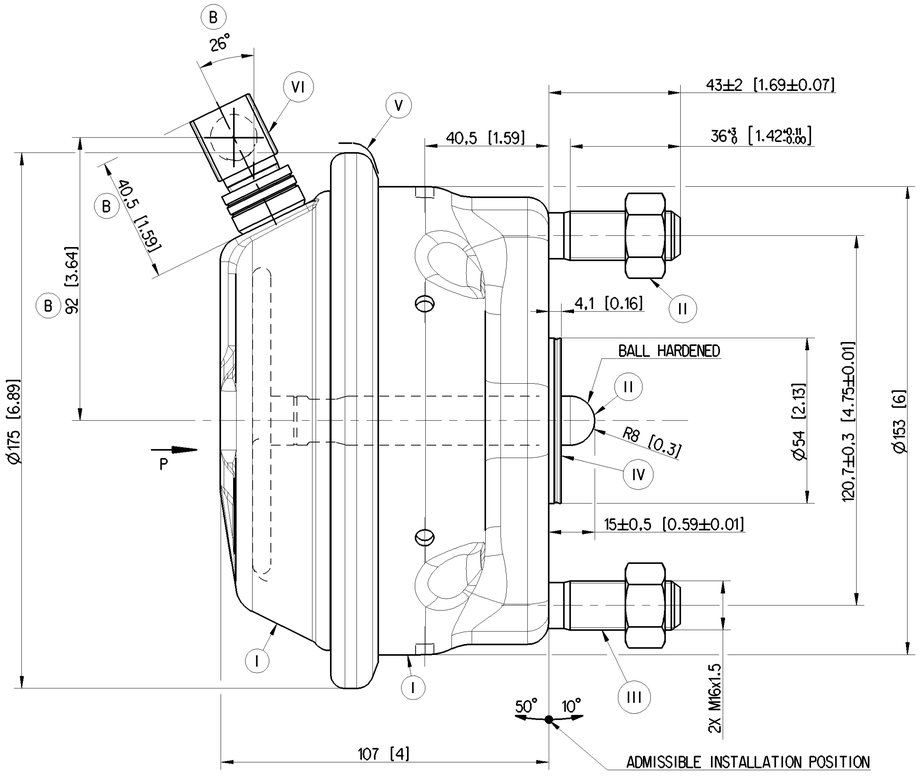

1 OPEN BREATHER HOLE

2 3/8"-18 NPTF (JED-686)

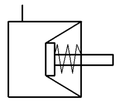

CIRCUIT DIAGRAM

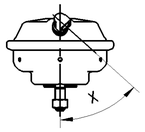

1:5

WABCO PART No.	SIDE PORT POSITION	CENTER PORT FITTING POSITION (X)
423 512 036 0	0°	270°
423 512 028 0	0°	90°

B

SL.No.	NOTES	
1.1	WORKING MEDIUM	AIR
1.2	WORKING PRESSURE	8 bar (116 PSI)
1.3	MAXIMUM PRESSURE (TEMPORARILY)	10 bar (145 PSI)
1.4	STROKE	64 mm MINIMUM (2.5" MINIMUM)
1.5	PRESSURE AT WHICH PUSH ROD STARTS MOVING (LIFT OFF PRESSURE-0mm STROKE)	< 0.35 bar < (5.08 PSI)
1.6	PRESSURE AT WHICH PUSH ROD IS FULLY OUT (LIFT OFF PRESSURE-64mm STROKE)	< 0.5 bar < (7.25 PSI)
1.7	THERMAL RANGE OF APPLICATION	-40°C TO +80°C (-40°F TO +176°F)
1.8	MALE THREADS TO BE PROTECTED AND OPEN PORTS TO BE FITTED WITH CLOSURE PLUG TO AVOID TRANSIT DAMAGE	

[..] DIMENSION IN INCHES

General Specification: JED-334-1 , Size ISO 14405 LP						
Further Technical Data: 423 505 056 0						
Doc. Code: 035			Sheet: 1 To 5			
General Tolerances JED-261						
Class 1)	Range of Nominal Dimensions (± mm) ≤ 50	> 50 ≤ 180	> 180 ≤ 400	> 400	∢	
Fine	0.5	1.0	1.5	2.0	±3°	
Medium X	1.0	2.0	3.0	4.0		
Coarse	2.0	3.5	5.0	6.5		
Topped Holes acc. JED-686						
1) Tolerance Class Applied Crossmarked						

Copyright WABCO®

Date	Signature
Drawn 2021-08-12	S J
Checked 2021-08-12	Senthilkumar
Expert Senthilkumar	

WABCO

BRAKE CHAMBER - TYPE 18

Mass	Scale	Material No.			Date of first issue: 2020-06-17
~3.2 KG	1:1 (1:5)	423 512 028 0			Doc.Code 053 / Language EN / Sheet 1/1
Size A 1	CAD System CREO	ECN-No. 508827	Revision 4x B	Techn. Resp. 5350	Replacement for -

100mm

Toute Communication ou reproduction de ce document, toute exploitation ou communication de son contenu sont interdites, sauf autorisation écrite préalable. Tous droits, en particulier ceux résultant de brevets ou de dépôts de modèles, sont réservés.

Weitergabe sowie Vervielfältigung dieser Unterlage, Verwertung und Mitteilung ihres Inhalts nicht gestattet, soweit nicht ausdrücklich zugesichert. Zuwiderhandlungen verpflichten zu Schadenersatz. Alle Rechte für den Fall der Patenterteilung oder Gebrauchsmustereintragung vorbehalten.

Non è permesso consegnare a terzi o riprodurre questo documento, né utilizzare il contenuto o renderlo comunque noto a terzi senza esplicita autorizzazione. Ogni violazione obbliga al risarcimento dei danni. Si riservano tutti i diritti derivanti da brevetti o modelli.

Copying of this document and giving it to others and the use or communication of the contents thereof, are forbidden without express authority. Offenders are liable to the payment of damages. All rights are reserved in the event of the grant of patent or registration of a utility model or design. This document is the subject of copyright.