SURFACE PROTECT./OBERFL. SCHUTZ		
I	JED-240-3	©
II	JED-256-1	©
III	JED-371	
IV	GUMMI / KUNSTSTOFF	
V	JED-240-2	©

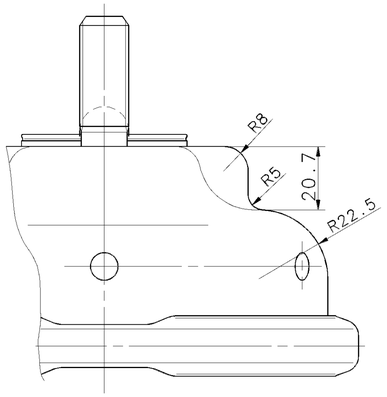

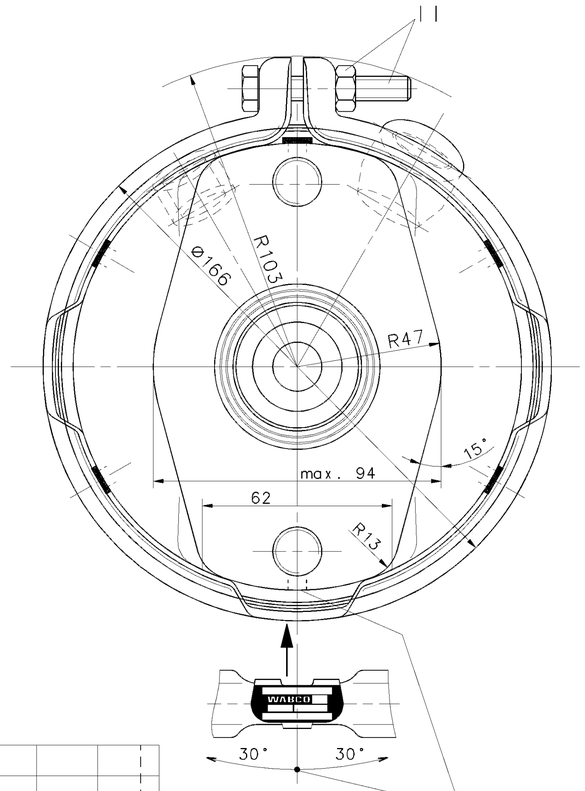

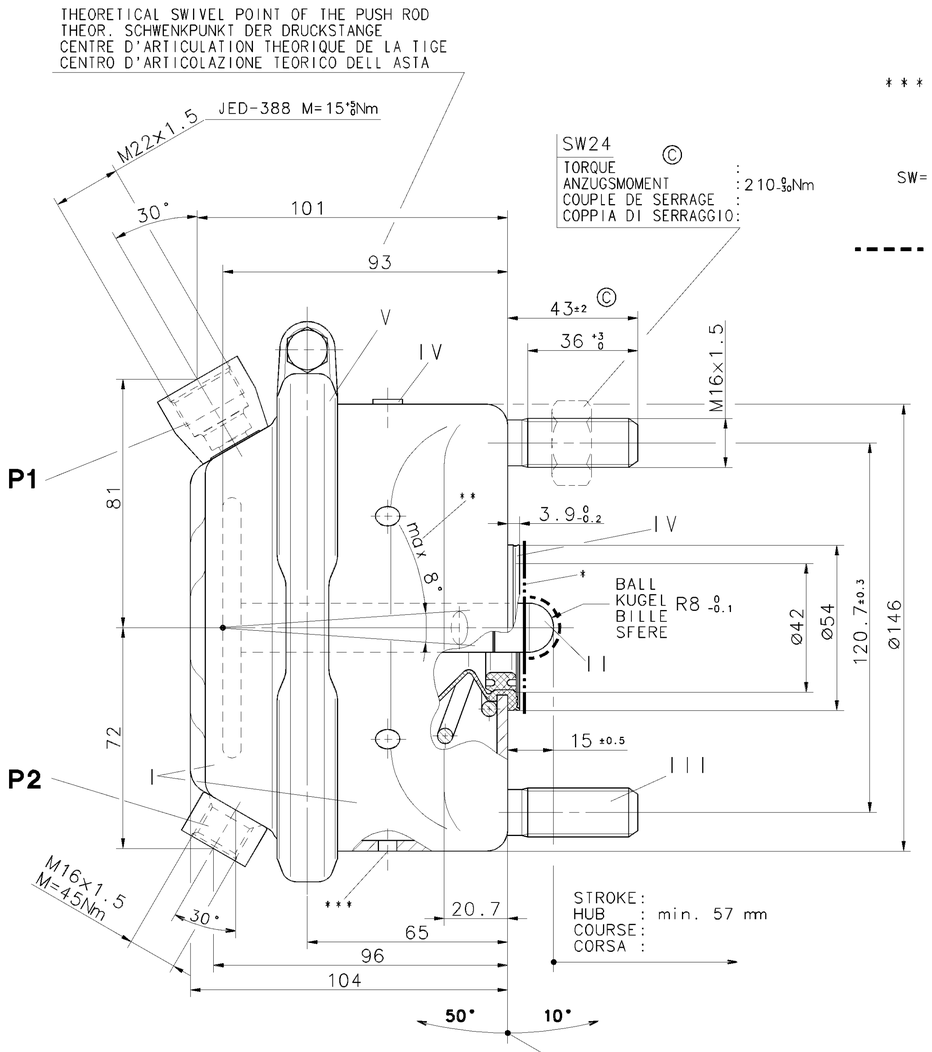

STROKE:
HUB : min. 57 mm
COURSE:
CORSA :

ADMISSIBLE INSTALLATION POSITION
ZULAESSIGE EINBAULAGE
POSITION D'INSTALLATION ADMISE
POSIZIONE DI MONTAGGIO AMMESSA

TO BE INSTALLED WITH LOWER BREATHER HOLE OPEN
IM EINBAUZUSTAND UNTERE ATMUNGSBOHRUNG GEOEFFNET
A MONTER AVEC LE RENIFLARD INFERIEUR OUVERT
INSTALLAZIONE : CON IL FORO DI SFIATO INFERIORE APERTO

*) SEALING SURFACE
DICHTFLAECHE
SURFACE D' ETANCHEITE
SUPERFICI DI TENUTA

**) DEFLECTION: AT STROKE
AUSLENKUNG: max.8° BEI HUB 0 mm
DEFLEXION: A COURSE
DEVIAZIONE: A CORSA

*** OPEN BREATHER HOLE
OFFEN ATMUNGSBOHRUNG
OUVERT TROU RENIFLEUR ©
APERTO FORO RESPIRATORE

SW= WIDTH ACROSS FLATS
SCHLUESSELWEITE
SURPLATS
LARGHEZZA IN CHIAVE

HARDENET
GEHAERTET
TEMPERE
TEMPERATO

THERMAL RANGE OF APPLICATION :
THERMISCHER ANWENDUNGSBEREICH : -40 °C..+80 °C
GAMME D'APPLICATION THERMIQUE :
CAMPO DI APPLICAZIONE TERMICA :

MEDIUM : AIR
MEDIUM : LUFT
FLUIDE : AIR
FLUIDO : ARIA

©

SERVICE PRESSURE :
BETRIEBSDRUCK : Pe max.= 10,2bar
PRESSION DE SERVICE :
PRESSIONE DI ESERCIZIO :

(TEMPORARILY :
(KURZZEITIG : Pe max.= 13 bar)
(DE COURTE DUREE :
(BREVE TEMPO SOLO :

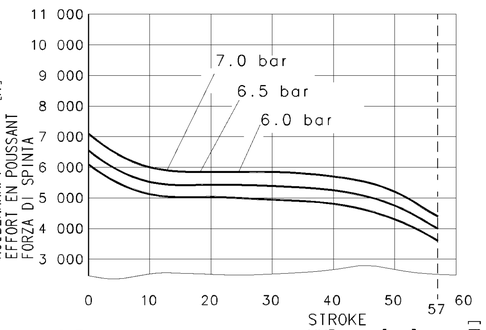

DEAD VOLUME AT
TOTVOLUMEN BEI 0 bar:=0.045 dm³
VOLUME MORT A
SPAZIO NOCIVO A

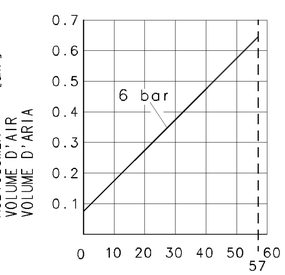

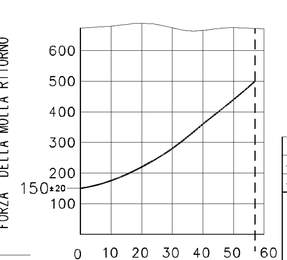

MAIN VIEWS REFER TO DIMENSIONS ONLY
POSITION OF COMPONENTS SEE REPRESENTATION OF VARIANTS

HAUPTANSICHTEN BEZIEHEN SICH NUR AUF DIE ABMESSUNGEN
POSITION DER BAUTEILE SIEHE ABWANDLUNGSDARSTELLUNGEN

VUES PRINCIPALES CONCERNENT LES DIMENSIONS SEULEMENT
POSITION DES COMPOSANTSVOIR DESSIN DE LA VARIANTE

VISTE PRINCIPALI RIGUARDANO DIMENSIONI SOLAMENTE
POSIZIONE DELLE COMPONENTI VEDERE DISEGNO DI VARIANTE

©

©

423 514 002 0		Re	P1+P2
423 514 001 0		Li	P1
WABCO	CUSTOMER'S NO. KUNDEN-NR. K.Z. No. CLIENT No. CLIENTE	AUSFUERUNG	ZGS
IDENTIFICATION			PORT ANSCHLUSS ORIFICE ORIFICIO

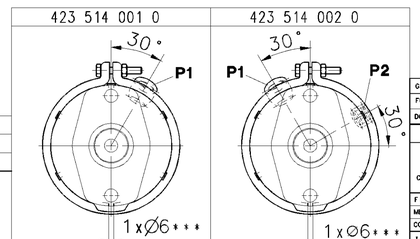

GENERAL SPECIFICATION: JED-334
FURTHER TECHNICAL DATA:
DOC. CODE: SHEET: 10

GENERAL TOLERANCES

CLASS 1)	RANGE OF NOMINAL DIMENSIONS (± mm) ≤50	>50 ≤180	>180 ≤400	>400
FINE	0,5	1,0	1,5	2,0
MEDIUM X	1,0	2,0	3,0	4,0
COARSE	2,0	3,5	5,0	6,5

± 3°

TAPPED HOLES ACC. ISO 4039 / JED-152
1) TOLERANCE CLASS APPLIED CROSSMARKED

DCN-NO.	REV.	DATE
092784	13xC	05-02-11
087198	1x B	03-10-15
066325	6x A	98-03-12

100mm

CADAM-DRAWING COPYRIGHT

DATE	SIGNATURE
DRAWN: 97-09-22	OPOLKA
CHECKED: 97-09-22	RISCHER
STANDARDIZATION:	

WABCO

BRAKE CHAMBER
MEMBRANZYLINDER 14
VASE A DIAPHRAGME ©
BRAKE CHAMBER

MASS	SCALE	PRODUCT IDENTIFICATION NO.	DOC. CODE	SHEET
3,2 KG	1:1	423 514 009 0	653	1/1
SIZE A 1	I.R.I. 520	SHAPE CODE	REPLACEMENT FOR	

©

EXPERT CODE 8 1 5 ©

PRODUCT TYPE ©

TOUTE COMMUNICATION OU REPRODUCTION DE CE DOCUMENT, TOUTE EXPLOITATION OU COMMUNICATION DE SON CONTENU OU DE SES PARTIES SONT INTERDITES SAUF AUTORISATION ECRITE. TOUS DROITS DE PROPRIETE INTELLECTUELLE, DE MARQUE ET DE BREVET RESERVES.
NON È PERMESSO CONDIVIDERE A TERZI O RIPRODURRE QUESTO DOCUMENTO, NE UTILIZZARNE IL CONTENUTO O RENDERNE ESPLICITE PARTI AL DI FUORI DELLA PRESENTE OPERA. TUTTI I DIRITTI DI PROPRIETÀ INTELLETTUALE, DI MARCHIO E DI BREVETTO SONO RISERVATI.
NO PUEDE COMUNICARSE A TERCEROS NI REPRODUCIRSE ESTE DOCUMENTO, NI UTILIZARSE SU CONTENIDO O REVELARSE SUS PARTES FUERA DE LA PRESENTE OBRA. TODOS LOS DERECHOS DE PROPIEDAD INTELECTUAL, DE MARCA Y DE PATENTE QUEDAN RESERVADOS.
WEITERGABE SOWIE VERVIELFÄLTIGUNG DIESER UNTERLAGE, VERWERTUNG UND MITTEILUNG IHres INHALTS NICHT GESTATTET, SOWEIT NICHT AUSDRÜCKLICH ZugESTANDEN. ZuWIDERHANDLungen SIND SCHADENSERSATZPFLICHTIG. ALLE RECHTE FÜR DEN FALL DER PATENTERTEILUNG ODER EINTRAGUNG EINES GEBRAUCHSMUSTERS VORBEHALTEN.
THIS DOCUMENT, IT'S CONTENT OR ITS PARTS MUST NOT BE COPIED OR DISCLOSED TO OTHERS AND THE USE OR COMMUNICATION OF THE CONTENTS THEREOF, IS NOT PERMITTED WITHOUT EXPRESS AUTHORITY. ALL RIGHTS OF PROPRIETARY INTELLECTUAL PROPERTY, INCLUDING COPYRIGHT, TRADE MARK RIGHTS AND PATENT RIGHTS, ARE RESERVED.
COPYING OF THIS DOCUMENT AND GIVING IT TO OTHERS AND THE USE OR COMMUNICATION OF THE CONTENTS THEREOF, ARE FORBIDDEN EXCEPT WITH PRIOR WRITTEN CONSENT. THIS REGARDS ALSO THE RIGHTS ARISING FROM THE GRANT OF PATENT OR REGISTRATION OF A UTILITY MODEL OR DESIGN. THIS DOCUMENT IS THE SUBJECT OF COPYRIGHT

1000/016/3/04.93
653/653