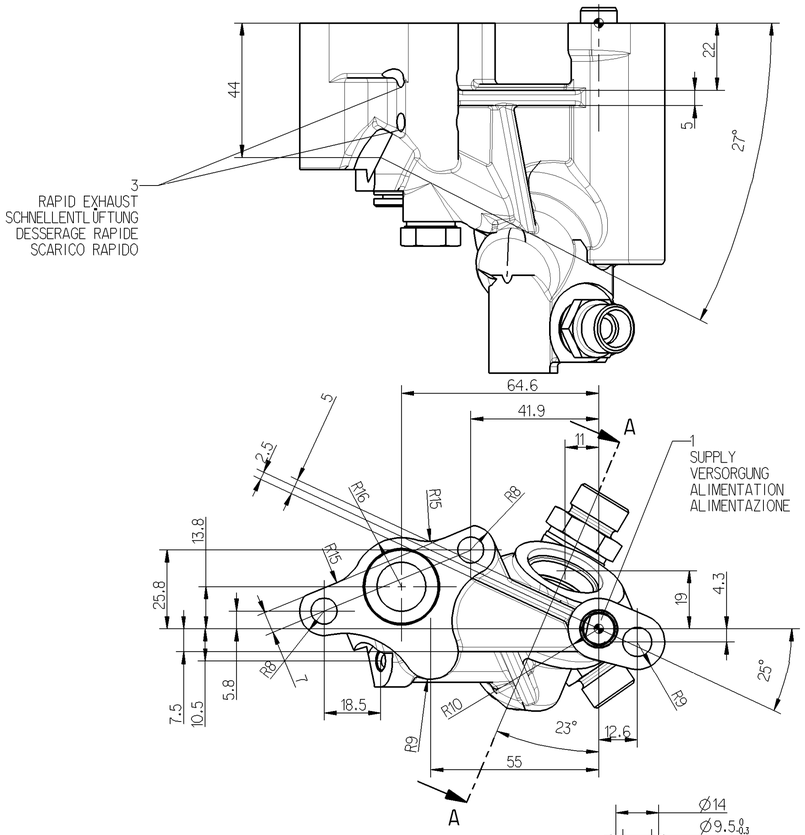

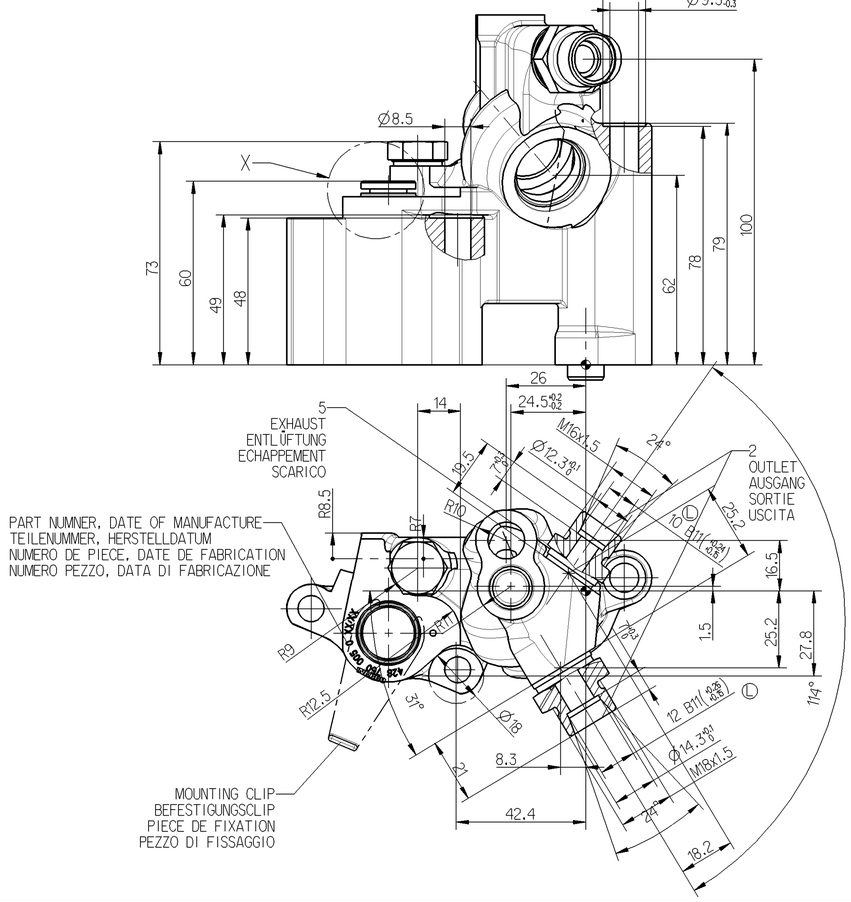

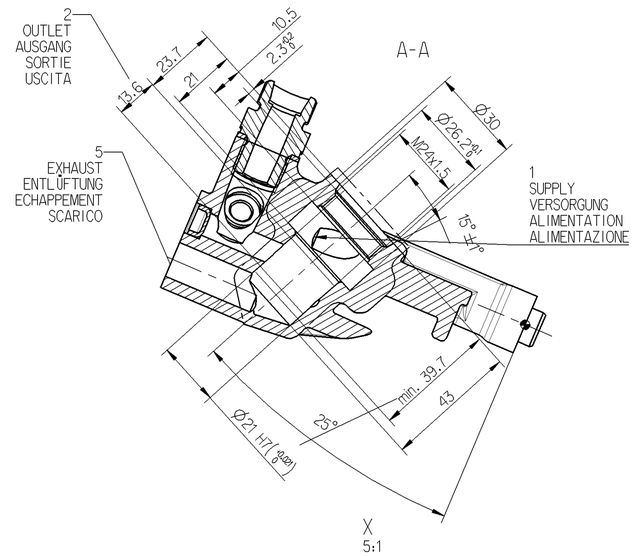

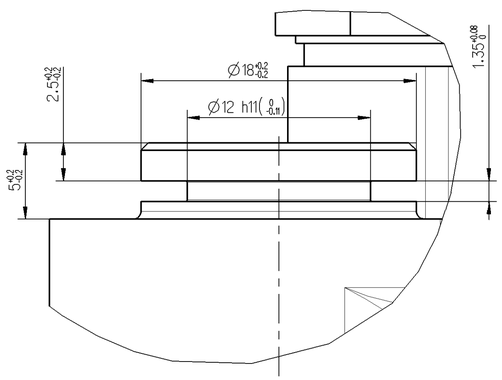

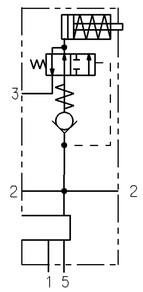

TECHNICAL DATA
TECHNISCHE DATEN
CARACTERISTIQUES TECHNIQUES
CARATTERISTICHE TECNICHE

WORKING MEDIUM BETRIEBSMEDIUM FLUIDE D'UTILISATION: FLUIDO DI ESERCIZIO :	MINERAL OIL MINERALOEL HUILE MINERALE OLIO MINERALE	10....2000 mm^2/s
TEMPERATURE RANGE OF MEDIUM DRUCKMITTELTEMPERATURBEREICH PLAGE DE TEMPERATURE DU FLUIDE GAMMA DI TEMPERATURA DEL FLUIDO		-30°C....+140°C
RANGE OF AMBIENT TEMPERATURE UMGEBUNGSTEMPERATURBEREICH PLAGE DE TEMPERATURE AMBIENTE GAMMA DI TEMPERATURA AMBIENTE		-30°C....+140°C
INSTALLATION POSITION EINBAULAGE POSITION D'INSTALLATION POSIZIONE DI MONTAGGIO	FLANGE FLANSCH BRIDE FLANGIA	±20°
WORKING PRESSURE BETRIEBSDRUCK PRESSION D' UTILISATION PRESSIONE DI ESERCIZIO		5 bar
STROKE HUB COURSE CORSA		$25^{+0.9}_{-1.1}$ mm
FORCE AT PISTON KRAFT AM KOLBEN EFFORT DE LA TIGE FORZA DEL GAMBO		F_{min}=89 N
WORKING VOLUME ARBEITSVOLUMEN VOLUME ABSORBE VOLUME ASSORBITO		8.7 cm^3
TORQUE ANZUGSMOMENT COUPLE DE SERRAGE COPPIA DI SERRAGGIO:	: : : :	M16x1.5: 20^{+5} Nm M18x1.5: 20^{+5} Nm

DCN-No.	Rev.	Date
094942	24L	06-03-01
094921	24K	05-06-22

State of Revision

General Specification: JED-334-0						
Further Technical Data:						
Doc. Code:			Sheet:		To	
General Tolerances JED-261						
	Range of Nominal Dimensions (± mm)					
Class 1)	≤ 50	> 50 ≤ 180	> 180 ≤ 400	> 400	∢	
Fine	0.5	1.0	1.5	2.0	±3°	
Medium	1.0	2.0	3.0	4.0		
Coarse	2.0	3.5	5.0	6.5		
Tapped Holes acc.						
1) Tolerance Class Applied Crossmarked						

Copyright WABCO ®

Date	Signature
Drawn	
97-06-18	Heinrich
Checked	
97-06-18	Löfing
Expert	
Heinrich	

WABCO

CONTROL UNIT
STEUERGERAET
DISPOSITIF DE COMMANDE
DISPOSITIVO DE COMMANDO

Mass	Scale	Material No.	WABCO Id. No.: 4287500050		
1.025 KG	1:1 5:1	428 750 005 0	Doc.Code: 605	Language: en/de fr/it	Sheet: 1/1
Size: TRI					
A 1	570		Function Code	CAD System: Pro/E	Prod.Type: 0 2 X
			Replacement for		

100mm

Toute Communication ou reproduction de ce document, toute exploitation ou communication de son contenu sont interdites, sauf autorisation expresse. Tout manquement à cette règle constitue un abus ayant et exposa son auteur au versement de dommages et intérêts. Tous droits réservés, notamment en cas de délivrance de brevet ou d'enregistrement d'un modèle d'utilité.

Weitergabe sowie Vervielfältigung dieser Unterlage, Verwertung und Mitteilung ihres Inhalts nicht gestattet, soweit nicht ausdrücklich zugestanden. Zuwiderhandlungen stehen einer öffentlichen Modelluach, die und Patent oder GM Eintragung entgegen.

Non è permesso consegnare o fare o riprodurre questo documento, né utilizzarne il contenuto o renderlo comunque noto a terzi senza autorizzazione esplicita. Ogni violazione costituisce un illecito abuso e comporterà il risarcimento dei danni subiti. Tutti i diritti sono riservati, in particolare in caso di rilascio di brevetto o di registrazione di un modello di utilità.

Copying of this document and giving it to others and the use or communication of the contents thereof, are forbidden without express authority. Contravention of this section has been used to constitute an incident abuse and result in a liability to the payment of damages. All rights are reserved in the event of the grant of a patent or registration of a utility model or design. This document is the property of WABCO.