PART CODE	MATERIAL	SURFACE PROTECTION
I	ALUMINIUM ALLOY	CHROMATED
II	STEEL	PASSIVATED
III	STEEL	PAINTED
IV	PLASTIC	NO TREATMENT
V	BRASS	SILVER COATING

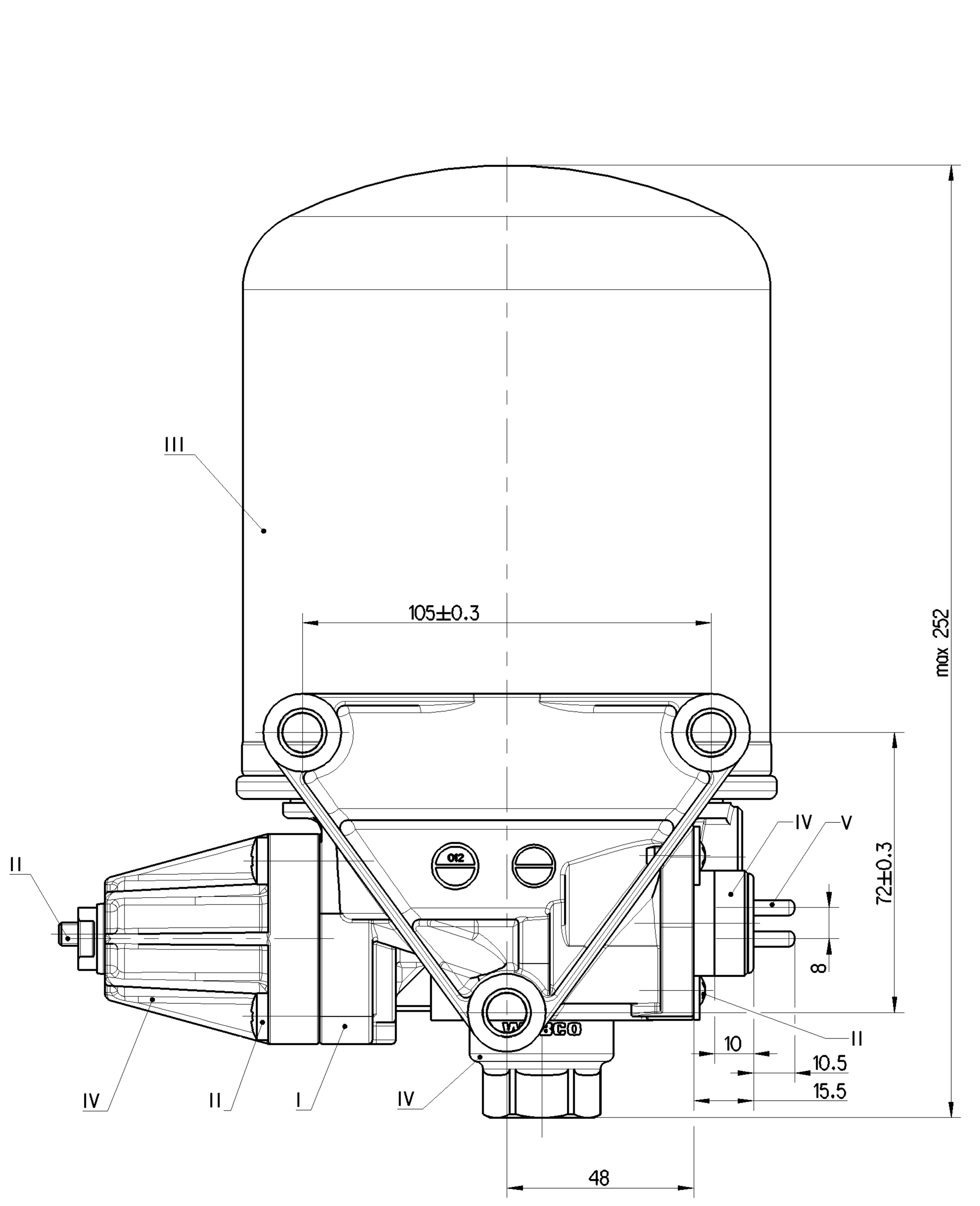

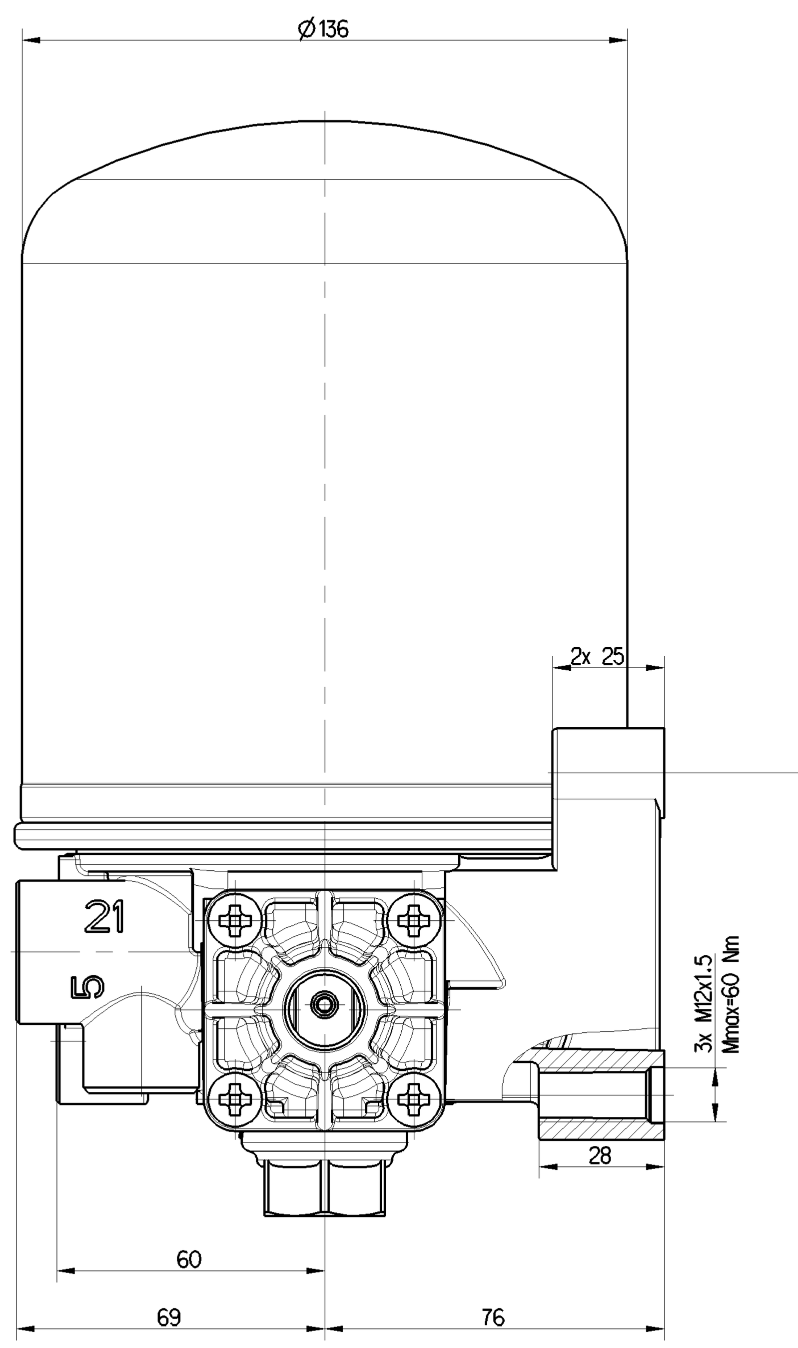

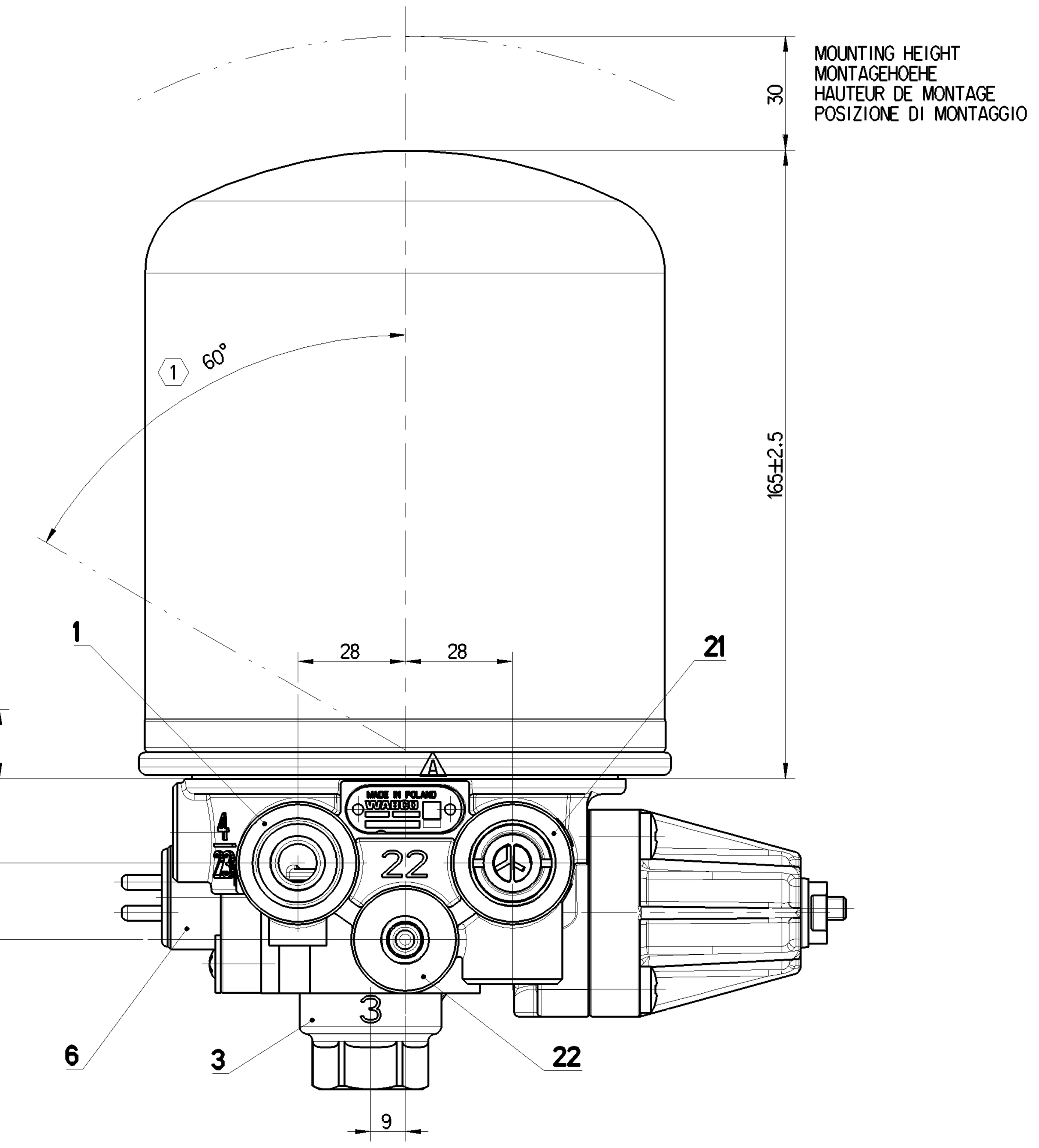

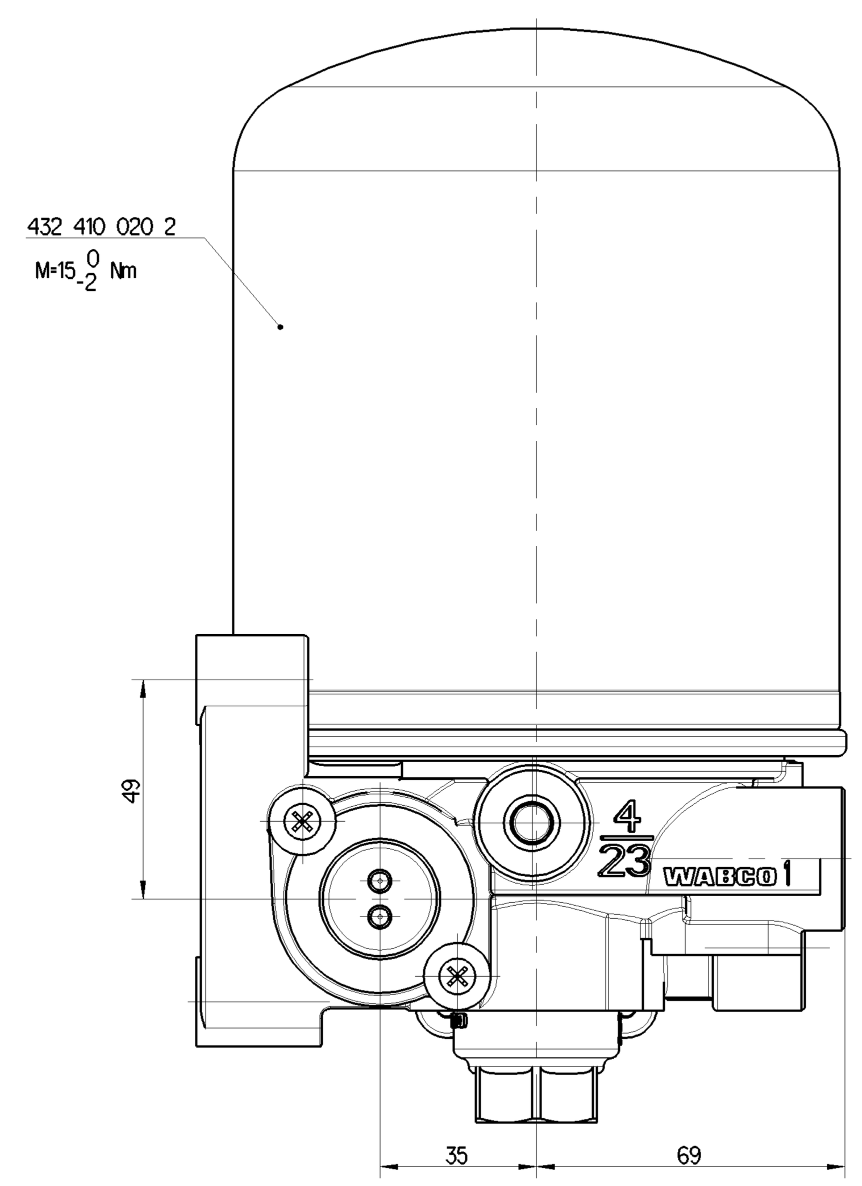

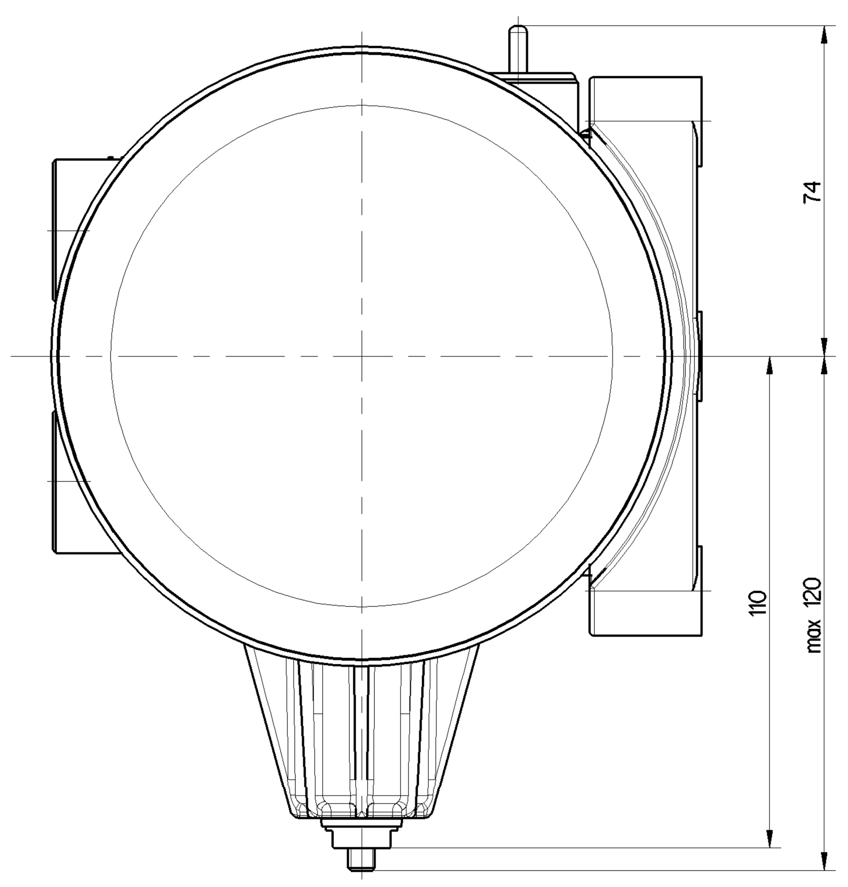

PORT ANSCHLUSS ORIFICE ORIFIZIO	FUNCTION FUNCTION FONCTION FUNZIONE	THREAD GEWINDE FILETAGE FILETTAURA
1	FROM THE COMPRESSOR VOM KOMPRESSOR PROVENANT DU COMPRESSEUR PROVENIENTE DEL COMPRESSORE	M22x1.5 d=15
21	TO THE RESERVOIRS ZU DEN LUFTBEHAELTERN AUX RESERVOIR AL SERBATOII PER	M22x1.5 d=16
22	TO RESERVOIR FOR REGENERATION AIR ZUM REGENERATIONS-LUFTBEHAELTER AU RESERVOIR D'AIR DE REGENERATION AL SERBATOII PER L'ARIA RIGENERATA	M12x1.5 d=12
3	EXHAUST FOR COMPRESSED AIR ENTLUEFTUNG FUER DRUCKLUFT ECHAPPEMENT POUR AIR COMPRIME SCARIO PER ARIA COMPRESSA	-
6	HEATING HEIZUNG CHAUFFAGE RISCALDAMENTO	M27x1

TECHNICAL DATA, TECHNISCHE DATEN, CARASTERISTIQUES TECHNIQUES, CARATTERISTICHE TECNICHE

THERMAL RANGE OF CONTINUOUS APPLICATION:
THERMISCHER DAUERANWENDUNGSBERREICH: -40°C... +65°C
PLAGE DE TEMPERATURE EN UTILISATION CONTINUE:
COMPO DI APPICAZIONE CONTINUA:

RESISTANCE TO HEAT:
WAERMEBESTAENDIGKEIT: +80°C MAX.
RESISTANCE A LA CHALEUR:
RESISTANZA AL CALORE:

MEDIUM: COMPRESSED AIR
MEDIUM: DRUCKLUFT
FLUIDE: AIR COMPRIME
FLUIDO: ARIA COMPRESSA

WORKING PRESSURE:
BETRIEBSDRUCK: Pe MAX.=13 bar
PRESSION DE SERVICE:
PRESSIONE D' ESERCIZIO:

MAX. PERMISSIBLE FREQUENCY:
MAX. ZULAESSIGE FREQUENZ: 50 Hz
MAX. ADMISSIBLE FREQUENZE:
MAX. AMMISIBLE FREQUENZA:

MAX. PERMISSIBLE ACCERELATION:
MAX. ZULAESSIGE BESCHLINIGUNG: ±10 xg
ACCELERATION MAX. ADMISSIBLE:
ACCELERAZIONE MAX. AMMESA:

DYNAMIC PRESSURE OF SAFETY VALVE:
STAUDRUCK DES SICHERHEITSVENTILES: 10^{+4}_{0} bar (BY $\mathring{V}$n=100 dm³/min)
PRESSION DYNAMIQUE DU SOUPAPE DE SECURITE:
PRESSIONE DINAMICA DELLA VALVOLA DI SICUREZZA:

TORQUES FOR CONNECTIONS: M12x1.5: Mmax = 21 Nm
ANZUNGSMOMENT FUER EINSCHRAUBSTUTZEN: M22x1.5: Mmax = 53 Nm
COUPLE DE SARRAGE DES RACCORDS:
COPPIA DI SERRAGGIO DEI RACCORDI:

(1) INSTALLATION POSITION AS DRAWN
EINBAULAGE WIE GEZEICHNET
POSITION D' INSTALLATION SUIVANT DESSIN
POSIZIONE DI MONTAGGIO COME DISEGNATO

PERMITED SILENCER:
FREIGEGEBENER GERAEUSCHDAEMPFER: 432 407 060 0
SILENCIEUX PERMIS:
SILENZIATORE AMMESSO:

COMBINED UNLOADER
DRUCKREGLER
REGULATEUR DE PRESSION
GRUPPO DI REGULAZIONE

CUT OUT PRESSURE:
ABSCHALTDRUCK: 8.1±0.2 bar
PRESSION D'OUVERTURE:
PRESSIONE D'APERATURA:

OPERATING RANGE:
SCHALTSPANNE: $0.6^{+0.4}_{0}$ bar
PLAGE DE REGULATION:
GAMME DI REGOLAZIONE:

HEATING:
HEIZUNG:
CHAUFFAGE:
RISCALDAMENTO:

NOMINAL POWER:
NENNLEISTUNG: 100W
PUISSANCE NOMINAL:
POTENZA NOMINALE:

BATTERY VOLTAGE:
BATTERIESPANNUNG: 12.0 V DC
TENSION DE BATERIA:
TENSIONE DI BATERIA:

CUT IN TEMPERATURE:
EINSCHALT - TEMPERATUR: 7 ±6 °C
TEMPERATURE DE FERMETURE:
TEMPERATURA DI CHIUSURA:

CUT OUT TEMPERATURE:
AUSSCHALT-TEMPERATUR: 29.5 ±3.0 °C
TEMPERATURE DE MISE:
TEMPERATURA DI APERTURA:

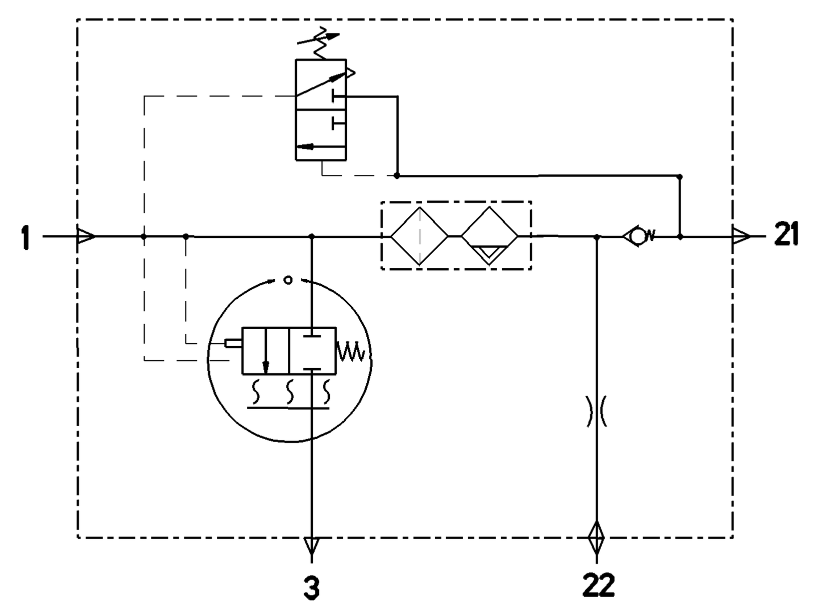

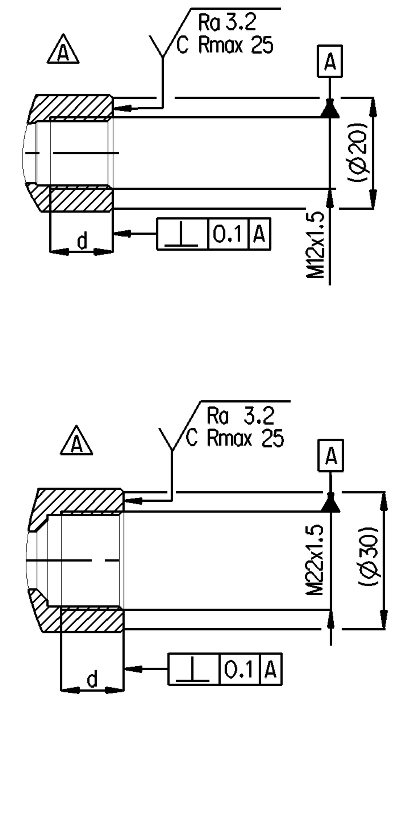

General Specification: ISO 8015, JED-334-1, Size ISO 14405 LP
Further Technical Data: Product Specification
Doc. Code: 035 | Sheet: 1 To 7

General Tolerances JED-261

Class 1)	≤ 50	> 50 ≤ 180	> 180 ≤ 400	> 400	∠
Fine	±0.5	±1	±1.5	±2	
Medium X	±1	±2	±3	±4	±3°
Coarse	±2	±3.5	±5	±6.5	

Tapped Holes acc. JED-152
1) Tolerance Class Applied Crossmarked

Copyright WABCO®

	Date	Signature
Drawn	2022-06-27	Kurzynski
Checked	2022-08-31	Kostrzewa

249 x 187 x 152
Dimensions in mm

WABCO

AIR DRYER
LUFTTROCKNER
DESSICATEUR D' AIR
ESSICATORE D' ARIA

Mass	Scale	Material No.	Date of first issue: 2017-08-18
4.23 kg	1:1	432 410 003 0	Doc.Code 005 / Language ML / Sheet 1/1
Size A 0	CAD System CREO	ECN-No. 510690 / Revision 4 x A / Techn. Resp. 5050	Replacement for: REMOVED FROM 4324109100

100mm